Operating Instructions

for

BOLEY Sliding, Surfacing and Screwcutting Lathe

Model 5 LZ

No.:

G.B. 320 E
1.56

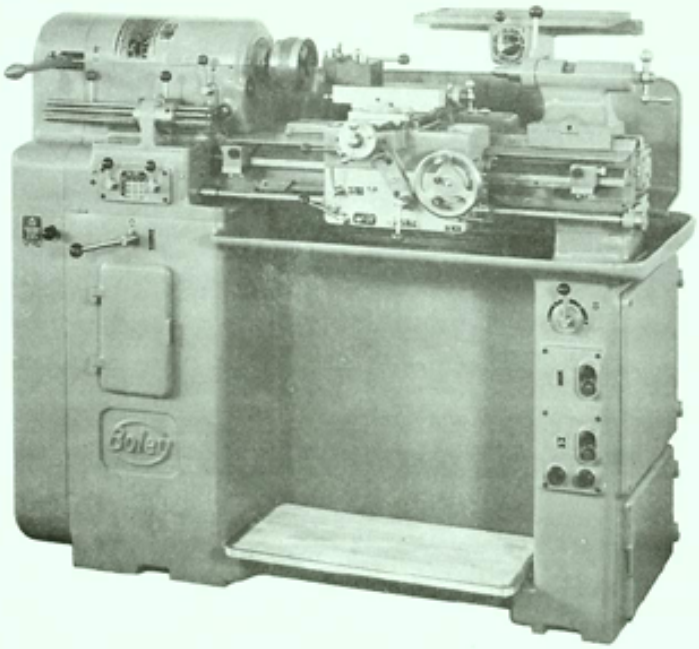

BOLEY Sliding, Surfacing and Screwcutting Lathe 5 LZ

Contents:

MAIN DIMENSIONS

		Millimetres	Inches
Height of Centres		130	5.1/8
Distance between centres		500	20
Maximum Length turned (with automatic feed)		500	20
Headstock for a 12, size 4 Collets			
Bore in spindle		23	7/8
Maximum Collet Capacity			
through		16	5/8
dead end		20	3/4
Max. swing over bed		250	10
Speeds (under load)	No.	22	
Geometric Ratio		1,25	
Back Shaft in Headstock		1 : 4	
Gear Ratio		1 : 4	
Tailstock			
Spindle Taper	Morse	3	
Travel of Spindle		100	3.7/8
Lateral Adjustment left or right		10	3/8
Saddle			
Maximum travel of Carriage		500	19.3/4
Travel of Top Slide		100	3.7/8
Travel of Cross Slide		190	7.1/2
Maximum Swing over saddle		200	8
Maximum Swing over Cross Slide		140	5.1/2
Cross Section of Tool		16x16	5/8x5/8
Feeds, 9 sliding per rev./		0,056-0,36	(.0022-.014)*
Feeds, 9 surfacing per rev./		0,028-0,18	(.0011-.007)*
Slow feed for fine turning up to per rev./		0,01	(.0004)*
Lead Screw	Tr.	36x6*	
For right and left hand pitches			
Millimetre pitches		0,2-20	
Withworth Pitches	t.p.i.		80 - 4
Module Threads	Module		0,3-4
* (Spindles of machine normally with metric threads!)			
Motor			
Power	kW	1,4/1,8	
Speeds (Pole-change)	r.p.m.	750/1500	
Weight of machine			
nett	appr.	800 kg	1765 lbs.
gross	appr.	1000 kg	2210 lbs.
with sea packing	appr.	1050 kg	2320 lbs.
Height of machine	appr.	1,25 m	4 ft.
Floor space	appr.	1,5x0,9m	5x3 ft.
Dimensions of case		1,7x1,1x1,5m	5.1/2x3.1/2x5ft.
Cubic capacity		2,8 cbm	99 cu.ft.

A) Packing, Transport, Erection and Starting

1) Packing and Transport

The sliding, Surfacing and Screwcutting Lathe 5 LZ is despatched in one case. The floor of the case is reinforced for transport, by two strong, longitudinal planks.

When unpacking the machine, take off the cover; the side walls should be separated from the floor of the case and the wooden planks removed. When the machine is transported by crane, an iron bar of minimum 30 mm dia. and 700 mm (1 1/4" dia. and 2 ft. 4") long should be inserted through the left door and the rear hole of the pedestal, thus the machine can be slung by hemp or steel rope, as shown on our diagram BON 715-6. A wooden block should be placed over the bar at the rear of the machine in order to avoid damage to the electric wiring; the rear splash guard should first be removed. If the machine does not hang level, it can be balanced by adjustment of saddle.

2) Erection

The machine weights approximately 800 kgs (= 1765 lbs.) A correspondingly strong foundation should, therefore, be selected. The floor space required is shown in our diagram BON 715-7. Care should be taken that there is sufficient space:

on the left, to open the protective cover and to draw out the collet lever,

on the right, to open the door giving access to change gear and to remove chips,

at the rear, to remove the coolant tank.

The accuracy of the spirit-level should be .02 to .04 mm per 1000 mm. The following are the permissible errors when setting up the machine:

Item:	Permissible error:
Bed straight in longitudinal direction, gearwheel plate side (curved upwards only)	0 - .02 mm per 1000 mm
ditto, opposite side (back)	± .02 mm per 1000 mm
bed flat crosswise; no wind (±) allowed	+ .02 mm or _ .02 mm per 1000 mm

In view of the accuracy expected of the machine, it should not be grouted down or screwed down with foundation bolts.

The machine is connected to the mains at the rear of the pedestal. The cover bearing the inscription "Attention Electric Equipment" should be opened after the locking screw and two catches have been removed. The mains can then be connected to the terminals "RST and MP". The connection should be carried out in such a way that the motor runs clockwise when the selector switch "D" has been moved to the right. The pump of the coolant attachment is connected to the right plug located at the rear of the machine. The left upper plug serves for lighting while the left lower plug may be used for connecting any attachment with 3phase motor. The change gearbox, which is dismantled for transport, should be fitted into the right pedestal.

3) Putting the machine into operation

a) Cleaning

The rust protector should be removed from all parts of lathe by petroleum or other thin cleansing oil. All metallic parts should then be lubricated again with machine oil.

Before putting into operation collector pin and carbon brush of reverse gear mechanism must be cleaned from any grease. Do not lubricate!

b) Lubrication (see lubrication plan BON 705-1ae)

For lubrication of machine, the following kinds of oil must be used:

For headstock and dog clutches only thin oil as shown in the headstock cover, such as:

"Mobil Velocite Oil No. 4", supplied by all Socony Mobil Oil Companies, with a viscosity

at 20° C or 68° F:	of 9,0	Centistokes or
	1,75°	Engler or
	49	R.I. or
	55,4	S.U.
at 50° C or 122° F:	of 4,0	Centistokes or
	1,3°	Engler or
	35,5	R.I. or
	39,1	S.U.

Only this oil should be used or an exact international equivalent, as such are recommended by:

Shell	Shell Tellus Oil 11
Esso	Special Oil Spinesso 32
BP	Energol HP 1

This oil should be kept in a specially marked container. (On delivery a container of "Mobil Velocite Oil No. 4" is added to the shipment). - Before starting the machine, the two lubricators on the headstock and that of the dog clutch should be filled with it.

For the gear box a lubricant with a viscosity of approx. 3° E at 50° C should be used (see page 6 of attached "Operating Instructions for electro-magnetic multiple disc clutches"). - We fill the gear box with "Mobil D.T.E. Oil Light" with a viscosity of 2,8° E at 50° C before despatch. (Shell Tellus Oil 27" should also be suitable). - The oil level of the gear box should be checked through filling stick 88 (oil level must be between two ring grooves) and, if necessary, topped up through filler plug 86.

All other lubricating points should be well lubricated with standard machine oil of good quality with a viscosity of 22° E at 20° C or 4,5° at 50° C. We recommend "Shell Tellus Oil 29" (in Germany "Voltol Gleitöl 2). Greasing to be effected by means of a grease gun (using the above mentioned oil and no grease) with several shots.

During its operation, the machine should be lubricated according to lubricating instructions BON 705-lac.

c) Test run

Before the test run, the saddle should be moved backwards and forwards by hand wheel, in order to ascertain whether either the lead screw or feed screw are engaged. The lever described as "Wendeherz" (= tumpler gear) should be placed in vertical position.

The vee belt should be placed on the small pulley of the driving motor. The locking nut on the 3-jaw chuck, or on the driver, should be tightened in order to prevent running off when applying the brake.

Starting of machine:

Press the push button marked "Main Switch".(This connects mains supply). Control lever "D" on "1" should be moved to the left. This starts the motor at a low speed of 750 r.p.m. Set lever "C" to "Forward 1:4" (this drives the headstock with screw cutting speed). When putting the machine into operation for the first time, this speed should be maintained for a certain period. Later (for higher speeds) place lever "C" over brake to "Backward 1:1" and lever "D" to "Right 1".

B) Construction, Operation and Maintenance
(see diagram BON 715-8a)

1) Electric equipment

This is located in the control box (79):

1 Motor Contactor with fuse as main switch

1 Selector switch for 2 motor speeds forward and backward.

1 Transformer with rectifier for electro-magnetic disc clutches located in the gear box, actuated by 24 volt D.C.

1 Fuse for lighting

1 Fuse for transformer

In design for automatic screw cutting, there are also:

3 air contactors,

and in design with coolant attachment:

1 additional motor contactor for the pump and

1 each tell-tale light for main and pump motors.

Control lever (45), situated on the column on the rear splash guard, controls the disc clutches and the brake in the gear box. The driving motor is situated under the left cover.

2) Drive (see drg. BON 715-8a)

Gear box (87) is driven from the motor by vee belt 17 x 1000 mm (= 0.67" x 39,37") over 2-step pulley. By placing the vee belt on one or other of the pulleys, a high or low speed is achieved. For adjustment of vee belt, nuts (94) should be loosened and the motor elevated by means of a lever (92); the vee belt is then adjusted by loosening adjustment screw (91). The tightening of the vee belt can be done only in such a way that it still can be pressed 20 - 25 mm with the thumb.

The headstock is driven from the gear box by an endless belt 40 x 1780 (= 1.57" x 70.07") over an 3-step pulley. While running, the belt can be changed from one step to another by means of lever (23), but only if the spindle rotates to the right. The belt is tensioned by loosening nuts (85) and set screw (84).

The reversing gear mechanism (see drg. BON 715-44ae) contains a direct gear, a transmission gear 1:4 with opposite rotating direction and a brake; the control being affected by means of electro-magnetic multi-disc clutches.

The 3 power leads 211 and 256 should be checked quarterly.

These leads provide the electro-magnetic multi-disc clutches with 24 volts D.C. The power collector brushes are subject to wear. For checking the wear, it is necessary to unscrew the power leads and to ascertain the wear on the brush inserts. If the brass brush of the multiple telescopic insert has a length of 2-3 mm, i. e. if only a circle of the small bores on the brush circumference is visible, the brush must be replaced. The power leads fitted are of the TSN 6 type (211) and STN (256). Replacement brush inserts can be obtained under designation "Brush inserts for power leads TSN 6 or STN 8". (Please refer also to the attached operating instructions of the makers of multi-disc clutches). The minus power lead for dry operating, 256, lining outside, must not be lubricated.

The oil in the gearbox must be renewed quarterly.

Due to the unavoidable abrasion of gears and clutch plates the oil becomes impure and must, therefore, be changed quarterly. If the oil change is not carried out regularly, there is a risk of the dirt lodging between the clutch plates and causing breakdowns.

The oil change must be carried out at shorter periods, if the electro-magnetic clutches are operated very frequently.

First the old oil is drained off by removing the screw 232. The screw is replaced and tightened up and the gearbox is filled with 0,6 litres of fresh oil. The recommended oil for this purpose is a machine oil having a viscosity of approx. 3° Engler at 50° centrigade (approx. 21 cSt at 50° C) in accordance with the makers instructions. We recommend "Mobil D.T.E. Oil Light" or "Shell Tellus Oil 27". The oil level should be between the two circular grooves of the oil level indicator pin 88 (see drg. BON 715-8a).

The magnet 236 in the gearbox serves for filtering out the steel abrasion from the lubricating oil. In about 3 - 6 months from the start of operation and then at least once a year it is necessary to dismantle the gearbox, take off the cover 235 and to clean the magnet, as otherwise there is a risk that the accumulated steel abrasions will be carried by the oil stream into the gears and bearings and thus cause a breakdown, When replacing the cover, care should be taken to see that it is screwed on tightly to prevent oil leakage.

3) Headstock

The spindle nose has external threads for holding the 3-jaw chuck, driver, etc. The spindle is stopped quickly by means of the electro-magnetic brake, and in order to prevent running off, all chucks are equipped with safety lock (34). The lock nuts should always be kept tight. The speeds should be selected in such a way that the surface speed of the chuck does not exceed 16 m/sec. The face plate should not exceed the speed of 710 r.p.m. A bearing seat for holding BOLEY collets a 12 is situated in the spindle. The collets are clamped by lever (61). The clamping pressure is set by hand wheel (22). The spindle runs on bearings with a very narrow oil film. In view of this, thin oil only should be used, as indicated in the table attached to the cover. Thick oil causes a rise in temperature and may result in the destruction of bearings.

The belt pulley runs on ball bearings independent from the spindle. It can either be coupled with the spindle direct by moving lever (32) when the headstock is stopped or connected to it over back gear with a ratio of 1:4. The belt pulley can be locked by the insertion of pin (56).

4) Adjustment of spindle bearings (see diagram BON 715-9)

The plain spindle bearings are adjustable. If a spindle is properly maintained, and the right oil used for lubrication, it will run for many years without visible signs of wear. If for some reasons the bearings should become enlarged, they can be adjusted in the following manner.

The screw (103) should be removed, clamping screw (126) loosened, and clamping mechanism (101), together with clamping lever (123) and guide pin (125), removed. Nut (104) should be loosened, cover (115) removed, clamping screw (119) loosened, forked guide (129) taken off, gearshaft (130) turned to the right, bush (131) pushed to the left;

then the cam (121) and spindle (114) should together be pushed slightly to the right with the aid of a screw M 6 in order to make stud (117) accessible. The lock ring (116) should be turned, stud (117) loosened, and spindle (114) taken out to the right. Oil fillers (124) should be removed, nuts (102) and socket screws (107) loosened, bearing plate (106) removed, socket screw (108), bearing shell (111) and belt pulley removed.

In order to determine the extent of wear, the diameter of the spindle and the bore of the bearing bushes should be checked. If grooves on the bearing face of the spindle are very deep, this should be ground and lapped. The required adjustment can be determined by checking the spindle diameter and bearing bore, allowing a minimum bearing clearance of 0,02 mm (= .0008"). After loosening the ring nuts (110 and 118) the bearing should be dismantled by tightening the outer ring nuts (105) and (122). The liners (127 and 128) should be removed from the bearings. These should be accurately machined by: the adjustment calculated multiplied by 3,14. These can then be replaced in the bearings, which are fitted into headstock housing and tightened by means of the inner ring nuts.

When the spindle has been fitted, it should be easily turned by hand without any play. If the wear is very slight, the adjustment can be carried out without scraping. If the wear is extensive, especially if the spindle had to be re-ground, the liners should be machined in steps and the spindle scraped. If by error, one of the liners should become too thin, causing difficult movement of the spindle, a new and slightly thicker liner should be prepared. It is important that the inner ring nuts (110 and 118) should be thoroughly tightened, since this also tightens the bearings.

The re-assembly is carried out in the reverse order, observing the greatest care and cleanliness. The bearings and spindle bearing faces should be lubricated before assembly. After

stud (112) has been tightened, lock ring (116) should be turned in such a way as to cover the stud. The cam (121) should be adjusted so that the back gear runs without play and is afterwards locked with the aid of clamping screw (119).

5) Tensioning the new belt:

If a new belt is put on to the machine, its two ends should be joined, if possible, on the machine. If, however, an endless belt is used, which cannot be parted, the spindle and belt pulley should be dismantled, as described in paragraph 4.

6) Carriage:

The carriage consists ofsaddle with apron, cross slide, and top slide as well as compound slide. Holes are provided on the cross slide for the mounting of parting off or other tool holders.

The distance between tool post and centre of component is 22 mm (= 7/8"). The sturdy design and high speeds make this machine especially suitable for work with tungsten carbide tools. Maximum cross section of tool is 20 x 20 mm (= 3/4" x 3/4"). The use of quick change tool holder d 30 is especially recommended. It can be supplied for any number of tools, and is equipped with height adjustment screw. A setting gauge d 33 can be supplied for setting the tools for centre height.

7) Turning:

The sliding feed for the carriage may be taken from either lead screw (7), feed screw (77), or hand wheel (72). As far as possible, the lead screw should be used only for thread cutting or high-precision turning. Drive to the feed screw is by vee-belt (57), 8 x 630 mm (= 0,315" x 26,575") from the spindle, through worm gear (59) and sliding gears. The vee belt is tensioned by swivelling the worm gear, which is clamped by set screw (25). Levers (26 and 28) engage the different amounts of feeds according to the table. Through drop worm and gear trains, a pinion in the apron is driven, which meshes with a rack on the bed. The feed screw always revolves in the same

direction as the spindle. When turning, the drop worm is actuated by either lever (65 or 69) which may be moved to the left or right according to the direction desired. Lever (73) trips the drop worm. While turning, the cross slide may be clamped by set screw (6).

8) Turning against Stop:

Right and left of the apron, each one stop (63) and (75) with adjustment screw (62) is provided on the bed, which trip the carriage when turning. When they are tripped, the pre-loaded spring is compressed in the apron, which disengages the drop worm from the worm wheel. For the turning of steps, gauge blocks may be placed on the stops. Screw (66) adjusts the tension of the spring.

For turning against stops, a drum containing 6 stops may be supplied against extra cost. Set screw (31) provides rough adjustment of the stops (33), while the screws (35) with lock nut are used for accurate setting. When using the extension rods supplied with this attachment, the stops may be set for turning length between 0 and 500 mm (= 0 and 20"). Lever (30) indexes the drum through one or two stations, always in the same direction. If only two or three stops are used, lever and drum are clamped together by thumb screw (29), when the drum may be moved in both directions by the lever.

9) Turning between Centres:

On this high speed machine, the ordinary drivers should not be used, owing to the possibility of accidents and vibrations. Self-clamping driver a 33, specially balanced and which can be used up to 3500 r.p.m., should be employed.

10) Facing:

Facing feeds may be produced by hand wheel or feed screw. They are engaged by lever (65), actuating the drop worm, and by moving lever (37) to the front or rear according to the

required direction. Facing and sliding feeds may be engaged alternately as often as required without tripping the drop worm. They are, however, interlocked. Stop (4) is provided on the ways of the cross slide, which, in conjunction with adjustable screw (1), trips the drop worm when facing to the rear. Screw (1) may be replaced by a normal gauge clock of 8 mm plunger if very accurate setting is required. When facing to the front, slide stop (4) forward until it moves through the hole in screw (1). Clamp collar (2) upon the protruding end, which will then serve as stop when facing outwards. The carriage may be locked by lever (67) to avoid movement during facing work.

11) Thread cutting:

The lead screw is placed vertically below the turning axis between the bed ways and is thus well protected against dust, chips and coolant. It has a pitch of 6 mm. A gear train gives a transmission ratio of 2:3. Therefore, when using change gear ratio of 1:1, the carriage moves through 4 mm for every spindle revolution. Holder a 48,2 should always be used, as the return is four times faster.

The lead screw is supplied with oil from nipple (21) by an oil pipe with holes at regular intervals, which lies above the lead screw. When thread cutting, the lead screw should be lubricated frequently. The half nut is actuated by lever (65). Downward movement closes the nut, upward movement opens it. The half nut may also be tripped by stops (64) or (74), which may be set on the bed. Lead screw and feed screw are interlocked. If it should be found, after considerable use of machine, that there is play between lead screw and half nut, the half nut may be tightened by turning set screw (68) to the left. An end bearing for the lead screw is provided in the left pedestal. Ring nuts (21) provide for adjustment. If worn out threads on one half of the lead screw do not permit accurate thread cutting, the lead screw may be reversed. Cap (143) (BON 715-10) should be removed and the lead screw pulled out to the left. Bearing sleeve (145) and clutch sleeve (144) should be interchanged and both secured with pins.

A shear pin is provided in the nose of the lead screw in order to protect the gear box. If this pin is broken, change gear (141) and bushing (142) (BON 715-10) should be removed. The remnants of the old shear pin should be removed and replaced by a new one. Some spare shear pins are supplied with the lathe.

Change gears should be mounted according to the plate inside the cover. They are kept in a compartment on the right side of the pedestal. Five studs (58) are provided below the change gear box to hold the most frequently used gears when they are not mounted, in an easily accessible position. An auxiliary bracket is needed for cutting module pitches. The method of mounting this is shown on page 14. The bracket must be placed in a suitable position to bring the change gears into mesh in sequence a-f.

12) Thread Cutting with Automatic Reversal:

When cutting long threads, it is best to open the half nut at the end and to return the carriage by hand wheel.

For short threads, the half nut may remain closed while reversing the spindle. The machine is constructed in such a way that after removing the lever (45) from "Forward 1:4" through "Brake" to "Reverse", the spindle is braked momentarily and then reversed at four times the original speed. At this speed, the carriage returns.

The machine may be equipped with automatic reversal. In this case, two end switches are provided on the rear of the bed (10 and 12), which are actuated by two adjustable stop bars (9 and 11) clamped to the carriage. The selector switch (45) has then two further positions, viz., automatic 1 and automatic 2.

"Automatic 1" means: Automatic reversal to rapid return at the left end of the thread, automatic stop and brake at the right end of the thread. In order to advance the carriage again, the lever must be turned into "O" position and returned to "Automatic 1".

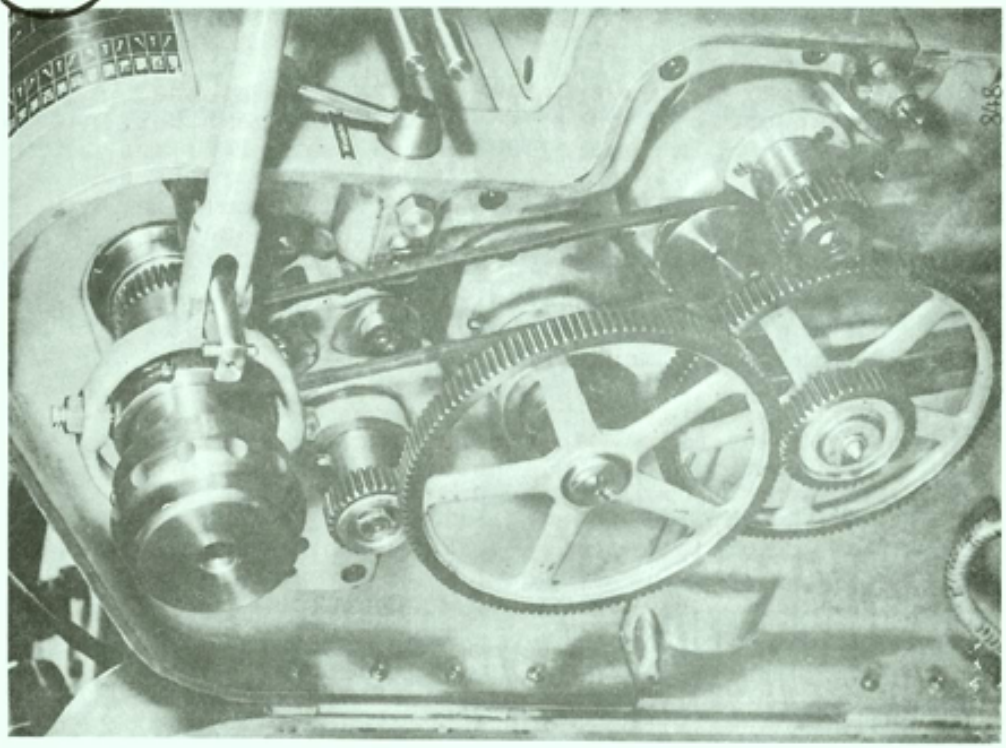
848

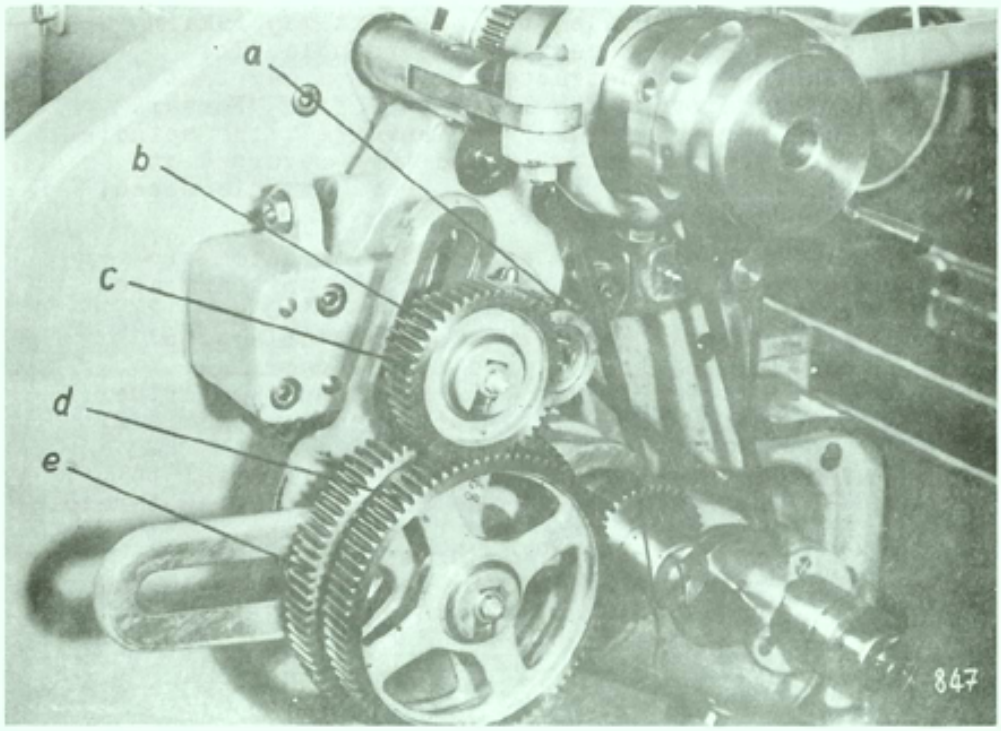
a
b
c
d
e
847

"Automatic 2" means: Automatic reversal to rapid return at the left end of the thread, automatic reversal to slow advance at the right end of the thread. This results in oscillating movement of the carriage.

In order to stop the movement, the lever should be placed on "Automatic 1". Normally, the automatic attachment is only suitable for right hand threads. If it is required to cut left hand threads by this method, a special pole-change switch should be ordered, which interchanges the current fed to the end switches. When setting the machine for automatic thread cutting, the selector switch (45) should be placed in the "Automatic 2" position. The machine should then be started while the half nut is opened and the component in position. The carriage should be slid to the left by hand wheel until the tool is in line with the left end of the thread. In this position, the upper stop bar (11) should be slowly slid to the left against the end switch until the spindle is reversed. The stop bar should be clamped in this position. The carriage should then be moved by hand wheel to the right until the tool is slightly to the right of the right end of the thread. The lower stop bar should be slowly advanced against the end switch until the spindle is reversed; the bar should be clamped in this position. After the half nut has been closed, the thread cutting operation may be commenced.

For automatic thread cutting, hand wheel (72) should be disengaged by pulling out knob (70).

The stop bar should be released when there is no more thread cutting to be done in order to prevent accidental operation of the end switches when moving the carriage by hand.

When thread cutting by "Automatic 2", the carriage reciprocates very rapidly. The tool should be withdrawn at the right moment, and then fed in again to the additional depth. In order to make this possible without special skill, a special threading tool holder d 32 may be supplied, which only requires the operation of one lever to withdraw and feed the tool automatically to the correct depth. However, it is also possible to use a normal retractable tool holder d 10 (see leaflet De 2a).

With this, the tool is withdrawn by lever and cam, while the new depth of cut is set on a ring scale.

13) Cutting of Multi-Start Thread:

For the cutting of multi-start threads, a special dividing head a 49 (see leaflet De 2a) with holder a 48,2 should be used. This is screwed to the spindle nose. The dividing head is only supplied against special order.

14) Thread milling:

A special thread milling attachment d 26 (see leaflet De 2a) may be supplied as extra equipment. Its motor is connected to the point provided for the machine lamp.

15) Precision Turning:

If a very high surface quality is required, high cutting speeds and small amounts of feed should be used. Fine feeds of 0,01 - 0,05 mm (= .0004" to .002") per rev. can be obtained by using the change gears enumerated in the table showing fine feeds (see page 14, top). This table is placed above the normale feed table within the cover. The change gear bracket is lowered as far as possible in order to bring one of the change gears into mesh with the change gear mounted on the left end of the feed screw (60). The half nut should be closed when turning. As with these fine feeds some time is required to bring the tool to the work, hand wheel (76) is provided, which may be placed on the right end of the feed screw instead of cap (8). By turning the feed screw with this hand wheel, the tool may be moved quickly to the component.

16) Tailstock:

The tailstock barrel is of 40 mm (= 1.5/8") diameter and bored Morse Taper 3. The feed screw for barrel movements has a 2 mm pitch. For the turning of slight tapers, the upper part of the tailstock may be set aside through 10 mm (= 3/8") in both directions. This is done by the opposite set screw (49). When adjusting, loosen screw (5) and clamping lever (50).

17) Coolant equipment

The coolant tank is fitted into the apparatus at the rear of the pedestal. A 3-pole point is provided on the rear of the machine to connect the coolant pump. In order to clean the coolant tank, pump it nearly dry, and remove together with the pump. As the coolant tank is very accessible, cleaning is easy and simple. There is no need for the operator to leave the same coolant in the machine until it has become thoroughly unfit for use and starts to decompose, as is found frequently in practice when the coolant tank can be reached only under difficulties. The tank holds approximately 7 gallons. The bracket holding the coolant nozzle is screwed into a hole on the carriage, and secured by lock nut.

18) Operator's seat

The machine is suitable for operation from a sitting position. For this purpose a seat g 83,1, 70 cm (= 2ft. 3") high, with back rest, may be supplied.

19) Serial number

The serial number of the machine is punched into the right end of the bed close to the tailstock.

20) Working with three-jaw chuck

If the machine is equipped with a three-jaw chuck 137 mm outer diameter, this chuck is only to be used for light turning operations (e.g. turning of light rings or discs). For normal turning operation always the smaller three-jaw chuck with 110 mm or 125 mm outer diameter should be used, in order to prevent overstressing of the machine.

C) Lubrication of machine

The machine should be lubricated at regular intervals, in accordance with the enclosed lubrication diagram BON 705/1ae. The lubricants used should be those previously enumerated.

Headstock bearings 31 and 32, quick clamping lever 33

These are lubricated before despatch with "Mobile Velocite Oil No. 4", etc., see page 5a. The headstock lubricators should be filled daily. Unsuitable oil causes excessive bearing temperature and may lead to seizure of the spindle and damage to bearings. The headstock bearings are set for these lubricants. The greatest care should be exercised in adhering to the above instructions;

otherwise, breakdowns may occur.

Slide Ways

The same care should be exercised when lubricating these, in order to prevent premature wear. Grease nipples 2, 9 and 13 should be provided with sufficient oil. Lubricant should not be directly applied to slide ways. It is only by way of the grease nipples that the lubricant reaches the lubricating slots in the carriage. If applied to the slide ways, it is removed by the wipers, and lost.

For the gear box a lubricant with a viscosity of approx. 3° E at 50° C is recommended. We fill the gear box with "Mobil D.T.E. Oil Light" with a viscosity of 2,8° E at 50° C before despatch.-The capacity of oil tank in the gear box is approximately 0,3 litre (= 1/2 pint).

D) Controls and Construction Parts (see drawing BON 715-8a)

1. Adjustment screw for surfacing stop.
2. Clamping ring for surfacing stop.
3. Fuses for lighting and transformer.
4. Surfacing stop.
5. Clamping screw for stop.
6. Clamping screw for cross slide.
7. Lead screw.
8. Cap for lead screw.
9. Stop bar for reversal at right end when automatic screw cutting.
10. End switch for automatic screw cutting.
11. Stop bar for reversal at left end when automatic screw cutting.
12. End switch for automatic screw cutting.
13. Compartment for electric switch gear.
14. Terminals for connection to mains.
15. Points for lighting.
16. Points for connection of equipment.
17. Conduit for connection to mains.
18. Vee belt stop pulley for high speed range.
19. Vee belt stop pulley for low speed range.
20. Driving Motor.
21. Groove nuts for lead screw.
22. Hand wheel for quick clamping lever.
23. Belt shift lever.
24. Lever for driver.
25. Clamping screw for tension lever for feed screw drive.

26. Feed lever, centre, left, right, = 1-2-4.
27. Feed lever, centre, left, right, = 1-1, 25-1,6.
28. Stop drum.
29. Screw for locking the lever on the stop drum.
30. Lever of stop drum.
31. Clamping screw for stops on stop drum.
32. Lever controlling back gear.
33. Stops on stop drum.
34. Safety lock for chuck.
35. Precision setting screw for stops on stop drum.
36. 3-Jaw chuck.
37. Cross slide lever.
38. Tool clamp.
39. Top slide.
40. Clamping screw for compound slide.
41. Cross feed screw.
42. Compound slide.
43. Cross slide.
44. Carriage with apron.
45. Lever for electro-magnetic clutches in gear box.
46. Top slide screw.
47. Tray.
48. Clamping lever for tailstock barrel.
49. Set screws for side adjustment of tailstock when taper turning.
50. Clamping lever for tailstock.
51. Clamping screw for tailstock upper and lower part.
52. Change gear bracket.
53. Washer for change gears.
54. Clamping screw for change gear bracket.
55. Shear pin for lead screw.
56. Locking pin for pulley.
57. Vee belt for feed screw.
58. Studs for holding change gears.
59. Worm drive to feed screw.
60. Feed screw and for mounting change gears when precision turning.
61. Clamping lever for collet.
62. Precision set screw for length stop.
63. Left length stop for feed screw.
64. Left stop for lead screw.
65. Control lever for feed screw and lead screw.
66. Set screw for tension of spring, when turning against stops.
67. Lever for locking the carriage.

68. Adjustment screw for half nut.
69. Lever for longitudinal turning.
70. Knob disengaging hand wheel.
71. Clamping screw for scale on hand wheel.
72. Hand wheel for longitudinal traverse of carriage.
73. Lever for releasing feed screw.
74. Right stop for lead screw.
75. Right longitudinal stop for feed screw.
76. Hand wheel for feed screw when precision turning.
77. Feed screw.
78. Selector lever for motor speeds backwards and forwards.
79. Control box cover.
80. Push button for main switch.
81. Push button for pump switch.
82. Tell-tale light for pump.
83. Tell-tale light for main switch.
84. Adjustment screw for belt tensioning.
85. Clamping nuts for gear box.
86. Oil hole on gear box.
87. Gear box.
88. Oil sight glass on gear box.
89. Surface for fitting the speed reduction gear.
90. Oil draining plug on gear box.
91. Adjustment screw for vee belt tentioning.
92. Lever for raising motor when changing vee belt.
93. Motor mounting plate.
94. Nuts for motor mounting plate.

Enclosed:

E) 1 Test Report BON 320/3E Bl. 1 with Instruction BON 320/3 Bl. 2
1 Hints for fitting of Electric Multi-Disc Clutches
1 Leaflet De 16

F) Plans:
1 Transport Instructions BON 715-6
1 Erection Diagram BON 715-7
1 Controls and structural parts BON 715-8
1 Headstock assembly drawing BON 715-9
1 Leadscrew bearing BON 715-10
1 Cutting Speeds in metres per min. BON 703/1
1 Register of Change Gears BON 377/93
1 Lubricating Instructions BON 705/1ae
1 Instructions for d 32
1 Wiring Diagram

Boley

Possible causes of unsatisfactory turning results and breakdowns

Defect:	Cause:	Remedy:
Inaccurate turning		
Machine not turning cylindrical.	Machine incorrectly erected.	Check erection (see page 4a of instruction booklet).
	Excessive play in saddle & slide guide-ways.	Adjust taper gibs in slide-ways.
	Tailstock spindle off centre.	Set tailstock over till spindle is central.
	Chuck jaws grip un-equally.	Change chuck or jaws.
Irregular diameter.	Tool loose in tool-holder.	Tighten up tool uniformly.
Poor finish		
Tool	Tool incorrectly set for height.	Set tool to height of centres.
	Tool dull or has wrong cutting profile.	Grind tool to suit material and cutting profile required.
	Damage by swarf.	Correct cutting angle and/or profile of tool.
Component	Centres in component incorrect.	Re-centre component, making sure depth and taper are corre
	Component has too much overhang.	Support on tailstock centre.
	Spring in component.	Use steady.
Cutting conditions	Cutting speed too high.	Correct spindle speed.
	Unsuitable feed	Correct feed
Coolant	Insufficient or un-suitable coolant.	Correct flow or quality of coolant.

Defect:	Cause:	Remedy:
Headstock	Too little oil in spindle bearings, insufficient damping.	Check lubrication. (See lubricating instructions BON 705-lae, Lubr. points 31-33.
	Too much end play in headstock.	Adjust by turning nut 104. (See BON 715-9).
	Spindle has seized up.	Either incorrect oil has been used or the oil does not drain off rightly. Touch up spindle bearings (Pages 8-10 - operating instructions).
Tailstock	Tailstock centre is damaged.	Re-grind or change centre
	Tailstock locking is loose.	Tighten up locking.
Vibration	Vibrations from shop floor.	Insert anti-vibration mat under machine.
	Chuck or holding fixture out of balance.	Balance chuck or fixture.
	Flat belt bumps because of wear or stretch.	Change belt.
	Vee-belt bumps because of wear or stretch.	Change vee-belt.
	Vibration transmitted from motor to machine.	Tighten up fixing screws on motor flange.
	Vibrations transmitted from reversing gear-box to machine.	Tighten up fixing bolts on gear-box flange.
Motor fails to turn spindle; spindle locked.	Check to see if defect in headstock; to do so, remove flat belt from headstock.	Turn step pulley over by hand. If resistance is felt, check if spindle seized up in bearing. Have spindle diamond-turned at makers' works. If necessary, re-scrape bearings (see pages 8-10 of instructions).

Defect:	Cause:	Remedy:
	Swarf blown into front bearing by compressed air.	Do not use compressed air for cleaning.
	Insufficient lubrication or use of too viscous oil.	See that lubrication complies with instructions in handbock.
Chuck or collet running off.	Collet seating in spindle out of truth because of wear.	Re-grind collet seating.
Spindle journals too hot.	Drip-lubricators supply too much oil or oil is too thick.	Re-set lubricators so that they empty in about 5 hours Use oil as specified in BON 705-lae.
Saddle or facing slide moves jerkily when the feed spindle is engaged or remains stationary.	Vee-belt for feed spindle is loose.	Tighten vee-belt 57 by swivelling worm-gear 59. (See pages 18-20 of instructions and BON 715-8a
Drop-nut cannot be disengaged.	Too little oil or oil too thick. Nut sticks.	Observe lubrication instructions in BON 705-lae lubr. points 1, 4, 6, 7, 9, 10, 11 and 15.
Saddle fails to move when feed spindle is engaged.	Shear-pin 55 sheared. (See BON 715-10).	Fit new shear-pin. See Page 13 of instructions.
Leadscrew has too much end play.	Wear or incorrect setting.	Adjust nuts 21. (See page 12 of instructions and BON 715-10).
Leadscrew has too much play in nut.	Wear or incorrect setting.	Reduce play by turning adjusting screw 68 to left. (See page 12 of instruction manual and BON 715-8a).
Saddle fails to move when Automatic I or II is switched on.	Relays in electrical part not pulling or sticking; no current from transformer and rectifier; break in wiring.	Open switchgear cover 79. Test relays, transformer, rectifieder and wiring. Replace defective parts.
Heavy wear in bed and slide guideways.	Unsuitable oil, usually too thin.	Use oil to BON 705-lae.

Defect:	Cause:	Remedy:
Driving belt oiled up and slipping.	Too much oil to spindle bearings or in layshaft.	Note lubricating instructions BON 705-lae. Replenish drip lubricators twice daily. Oil level in sight glass for point 51.
Reversing gear does not work or fails to operate brake.	Multi-disc clutch sticking because oil is dirty. See BON 715-44e.	Note instructions for reversing gear (Pages 7a/7,1 of instruction manual).
Reversing gear does not work or fails to operate brake.	Electric contacts or fuse loose; transformer or rectifier defective.	Tighten up contacts and fuse; replace transformer or rectifier.
	Brushes worn.	To cure, see page 7,1 of instruction manual.
	No 24 volt current at transformers for clutches or mains voltage too low.	Check transformers and replace where necessary. Increase voltage to 24-26 volts. Mains voltage must be 220 or 380 volts, 3phase (resp. 400/440 3phase, giving 230 volts single-phase).
Reversing gear is noisy and rough.	Wear in bearings, magnetic clutch, gears.	Overhaul in makers' works usually necessary. Slave reversing gears available

Operating Instructions for the Thread Cutting attachment d 32

(Please refer to Drg. BON 715/12, sheet 2)

1) The thread cutting attachment is fixed on the top slide, with the aid of fixing screw "a", in such a way that the aligning edge "b" is parallel with the edge of the top slide. This brings the thread cutting attachment into an angular position of 26°. This arrangement ensures that the tool only takes a cut on the left, just skimming the right-hand flank. The top slide, therefore, should not be adjusted when thread cutting.

2) The adjusting screw "c" is used for setting the angle of cut, according to the kind of material and component.

3) The tip of the thread cutting tool is set for the centre of the component.

4) Adjusting knob "d" is used for setting the thread pitch required. It is then locked in position by screw "h".

5) Setting knob "e" is used for the number of passes in which the thread is to be cut.

6) The infeed lever "f" should be turned to the left into its end position.

7) The control lever "g" is swivelled to the front.

8) The first thread is cut with this set-up, infeeding the facing slide. The facing slide is then bolted in the end position.

9) The infeed lever "f" is then swivelled to the right into its starting position, and the control lever "g" is swivelled backwards. This moves the thread cutting tool back by about 6 mm, plus the infeed used.

10) Having clamped the new component, the thread is produced cut by cut by swivelling the control lever "g" backwards and forwards, whilst the infeed

P.T.O.

lever "f" continues moving to the left. When it reaches its end position, the infeed ofthe thread cutting tool is finished. If necessary, further finishing cuts can be used. Here, the control lever is again swivelled backwards and forwards, but no infeed is effected. When the thread is finished, the infeed lever is put back to its starting position. If the infeed happens to be too big whilst the cut is being taken, it can be reduced at any time by turning the infeed lever back. This can be done even when the thread cutting is in progress.

11) The thread cutting attachment should be amply lubricated.

Boley

Recommendations for the use of Molybdenum Disulphide as addition to lubricants

Carefull lubrication of the machine in accordance with the enclosed instructions is essential in order to obtain long life without noticeable wear and breakdowns. However, the effectiveness of the lubrication can be increased considerably, if the sliding surfaces of the machine are treated regularly with molybdenum disulphide as well. In this way, friction is still further reduced and emergency running characteristics improved.

The parts in question are treated with molybdenum disulphide before leaving the makers' works. However, we recommend that the treatment be repeated at regular intervals, as only thus can the initial improvement be maintained.

Below, we are giving some hints as to which parts and positions in the machine should be treated and which kinds of molybdenum disulphide should be used. We do not wish to recommend any special make, but are limiting our choice to the products of Molykote KG., Arnulfstraße 71, Munich 19, because we use these in our own works. You can also procure descriptive literature from this firm.

No Molybdenum Disulphide in headstock bearings !

1) Tailstock centres, pads for steadies

By this treatment, the friction is lower, the life of the centres is longer, the centre holes in the component are not damaged, frazing and pick-up are avoided in components and machine parts.

2) Tapers on collets and in spindle bore and in thrust tube

The collets open more easily and the tapers show less tendency to stick or pick-up.

Treatment with MOLYKOTE PASTE G

After cleaning and, if possible, de-greasing the sliding surfaces, apply a small quantity of Molykote Paste G to them with a soft leather cloth or stiff brush.

---

3) All slideways in the machine

Bed and saddle guides, slide guides, the guides in sliding tailstocks and turret slide

/continued ...

Boley

Treatment with MOLYKOTE RAPID PASTE

Wash the sliding surfaces with one of the usual solvents (such as tri or petrol) and allow them to dry. Apply a thin uniform layer of Molykote Rapid Paste with a brush. Rubbing it in mechanically under pressure is not necessary. Before using ordinary lubricants for these machine parts, if possible allow to run dry for a very short while.

---

4) Oil lubrication of usual kinds - drip, forced feed and dip - (gearbox)

Application of MOLYKOTE M 55 (Concentrate in Oil

Add 3 - 5 % Molykote M 55 to gearbox and machine oils. Increase the percentage according to the demand made on the oil as regards pressure absorption. In extreme cases, when stresses are exceptionally high, add up to 10 % Molykote M 55.

---

5) To avoid contact rust in components, treat with MOLYKOTE GK PASTE

If during over-haul or inspection contact rust is found anywhere, clean the parts in question and apply a thin layer of Molykote GK Paste with a hard brush or leather cloth etc. Rub it in hard.

6) For grease-lubricated bearings

When long periods between greasing, a reduction in wear and increased reliability are required. Ball, roll and needle bearings, joints and splined shafts, screwed spindles and small gearing running at low speeds. Spindle supports for drilling spindles, thrust ball bearings in spindle supports, ball joints in drilling spindles, screwed spindles for the sockets sizes 1 and 2.

Application of MOLYKOTE BR 2 High-Duty Grease

Molykote universal BR 2 High-Duty grease is applied in the usual way. Ball and roller bearings are filled to about 1/3rd of the internal space in the bearing. Grease should be pressed into plain bearings until there is no more old grease in them. Molykote BR 2 is a lithium grease and, as is general practice, should not be mixed with any grease made on any other saponific basis.

/continued ...

7) Components with complicated surfaces and inaccessible parts

Treatment with MOLYKOTE RAPID-SPRAY

Carefully clean the surfaces in question with a solvent such as tri and then spray on the Molykote Rapid-Spray thinly and evenly. The Molykote film adheres very well if the solvent is allowed to vaporise for a short while and the running surfaces are run in.

---

8) In both chip forming and chipless machining of metal, to increase life of tools and to avoid pick-up on the tools when drilling, tapping, thread rolling, turning, reaming and counter sinking

a) Application when cutting oils are used

Add 3 - 10 % Molykote M 55 Rapid to the cutting oil according to the demands made on the tools.

b) Application with aqueous emulsions

Molykote C white boring oil concentrate, as is usual with boring oils, is mixed with a little tap water to produce a creamy emulsion, which is afterwards further diluted to suit its purpose. Molykote C white boring oil concentrate can always be mixed in automatic mixers. As a general reccommendation, a dilution of 1:30 should be used for workshop tests. According to the class of machining, the concentration can then be reduced, if necessary to 1:40.

With materials which are specially difficult to machine, a higher concentration of say 1:20 is reccommended.

---

c) Dry cutting

How to treat with MOLYKOTE LUBRICATING PENCIL H

Clean rubbing surfaces of tool (for instance, the cutting and relief faces of a turning tool) with a solvent (tri, petrol etc.) and rub the Molykote H lubricating pencil into them hard.

The above remarks should only be regarded as hints for additional lubrication and treatment of parts subject to wear. A detailed description of all molybdenum disulphide products and their application would take up too much space. We therefore advise our customers to apply to the specialist firms for detailed literature.

Boley	Controls and Structural Parts of BOLEY Sliding, Surfacing and Screwcutting Lathe Model 5 LZ	bON 715-8ae

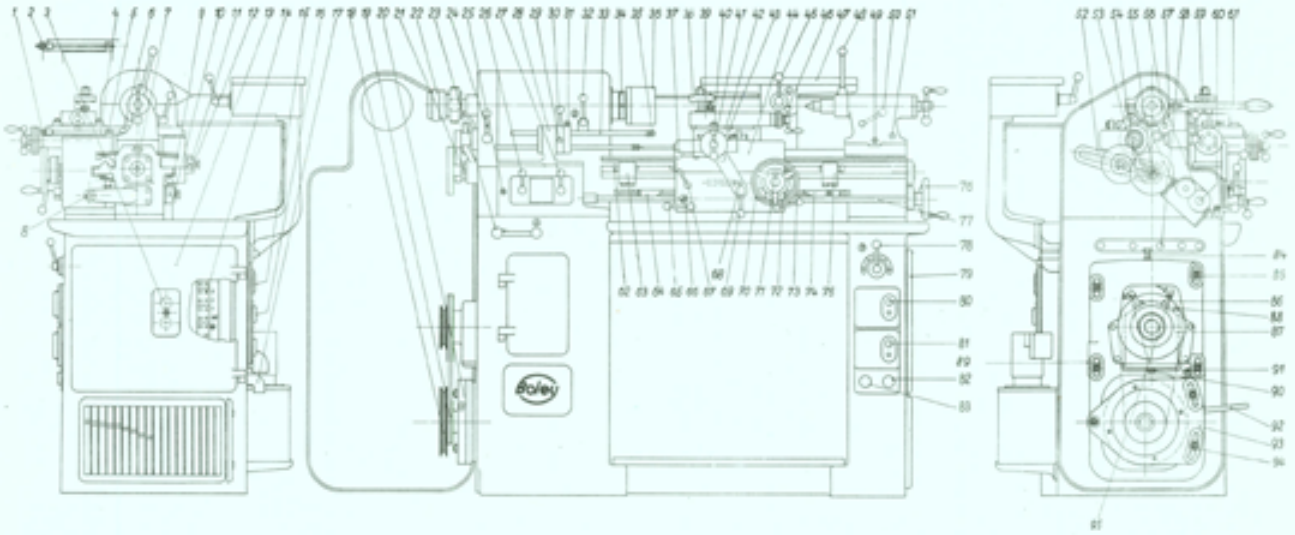

G. Boley Werkzeug- und Maschinenfabrik Eßlingen / Neckar

Abgelegt in Mappe

Boley

Erection Diagram for BOLEY Sliding, Surfacing and Screwcutting Lathe Model 5LZ

BON 715-7ae

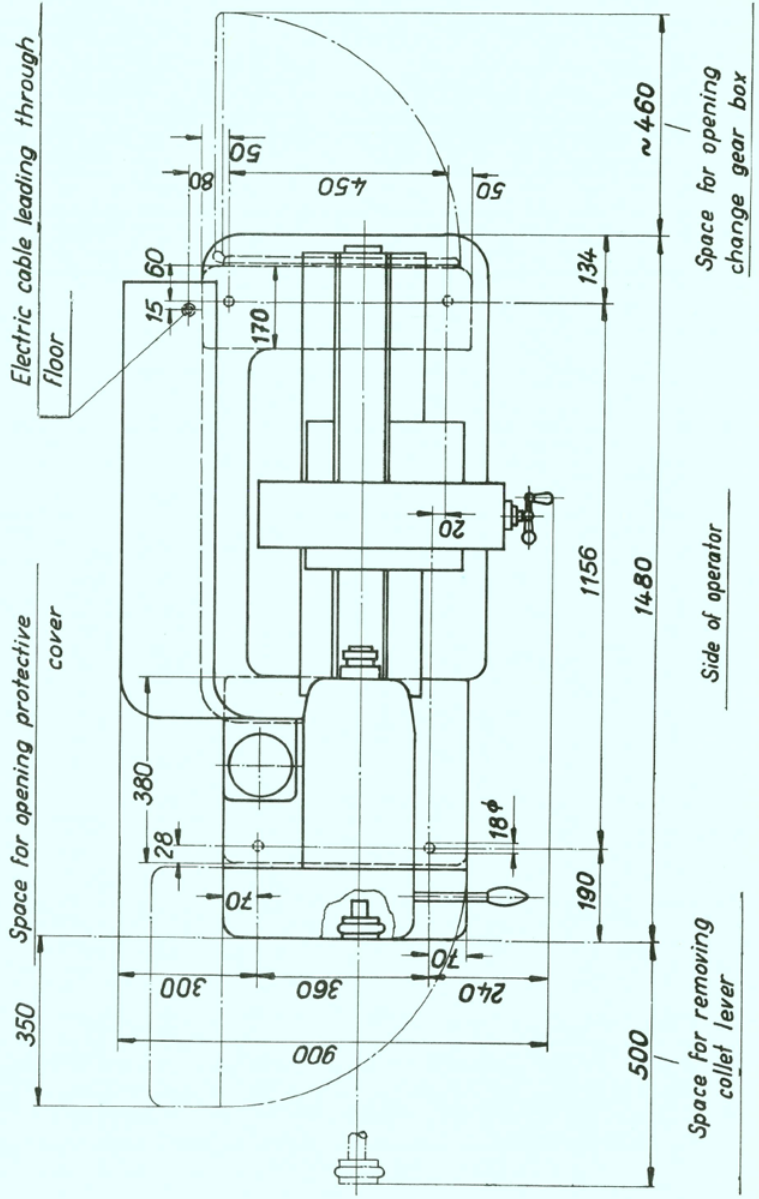

G. Boley, Eßlingen a. N.

Ersatz für

Ersetzt durch

Gez. 26.3.56 gepr. AV bearb. gen.

Boley

Headstock Assembly Drawing
of BOLEY Sliding, Surfacing
and Screwcutting Lathe 5 LZ

BON 715-9e

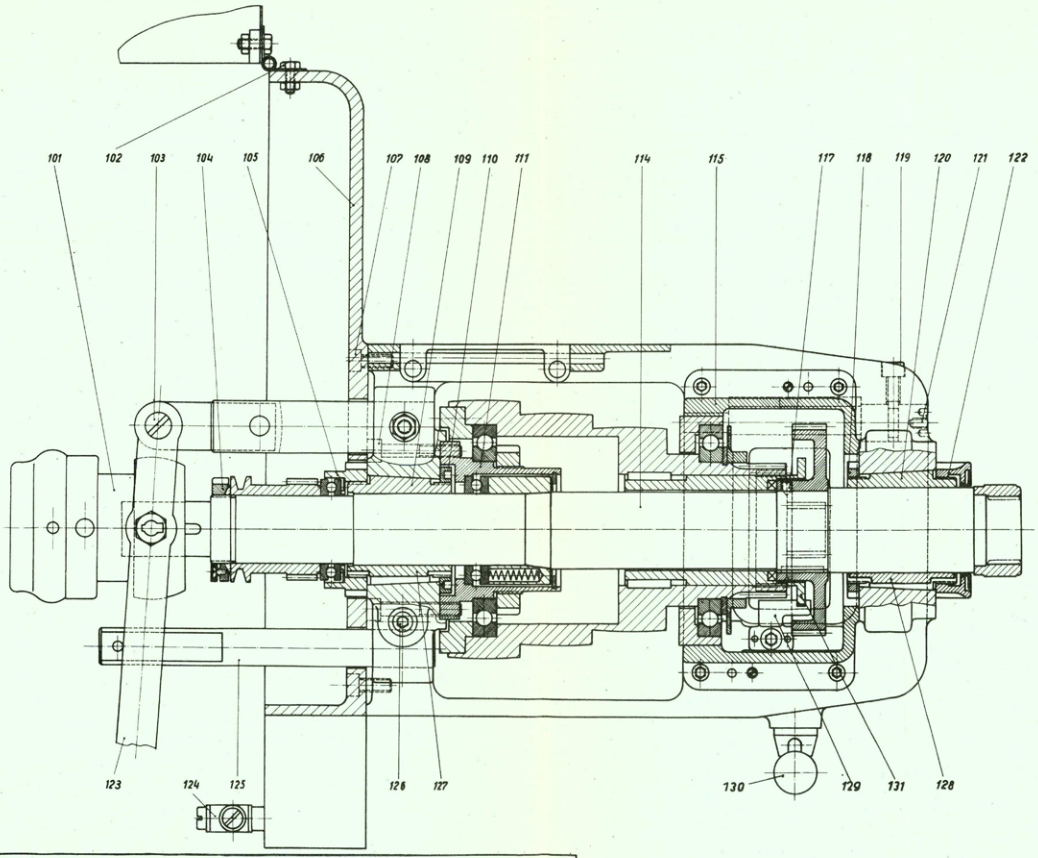

G. Boley Werkzeug-und Maschinenfabrik Eßlingen / Neckar

Boley	Longitudinal Section of Back Gear	BON 715-44ae

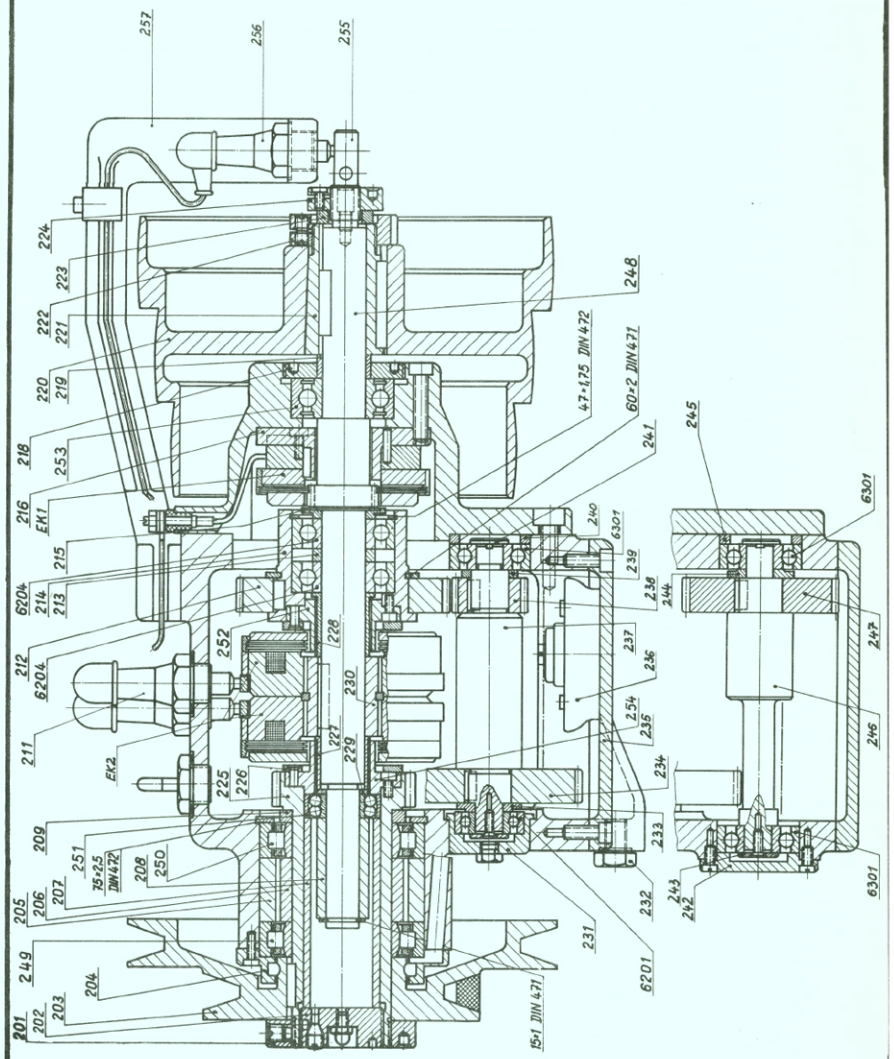

G. BOLEY - ESSLINGEN I NECKAR

Abgelegt in Mappe

Boley

Leadscrew Bearing of BOLEY Sliding, Surfacing and Screw-cutting Lathe Model 5 LZ

BON 715-10e

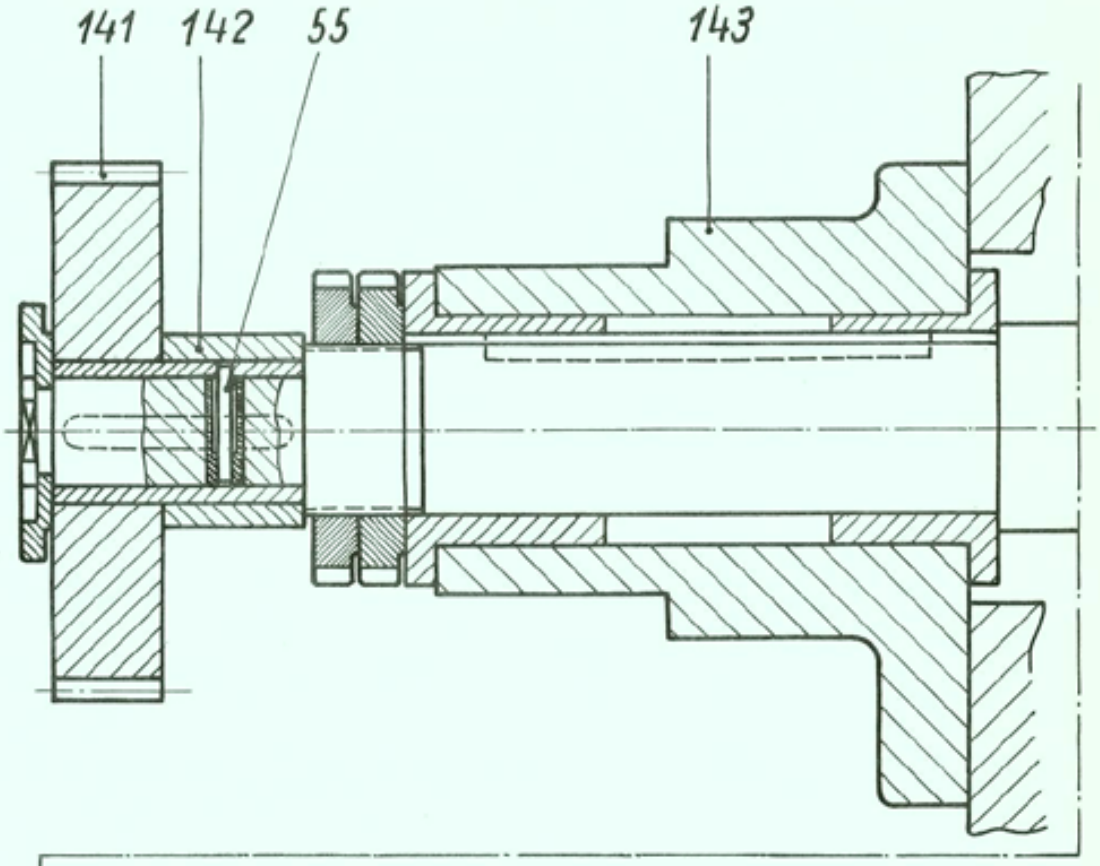

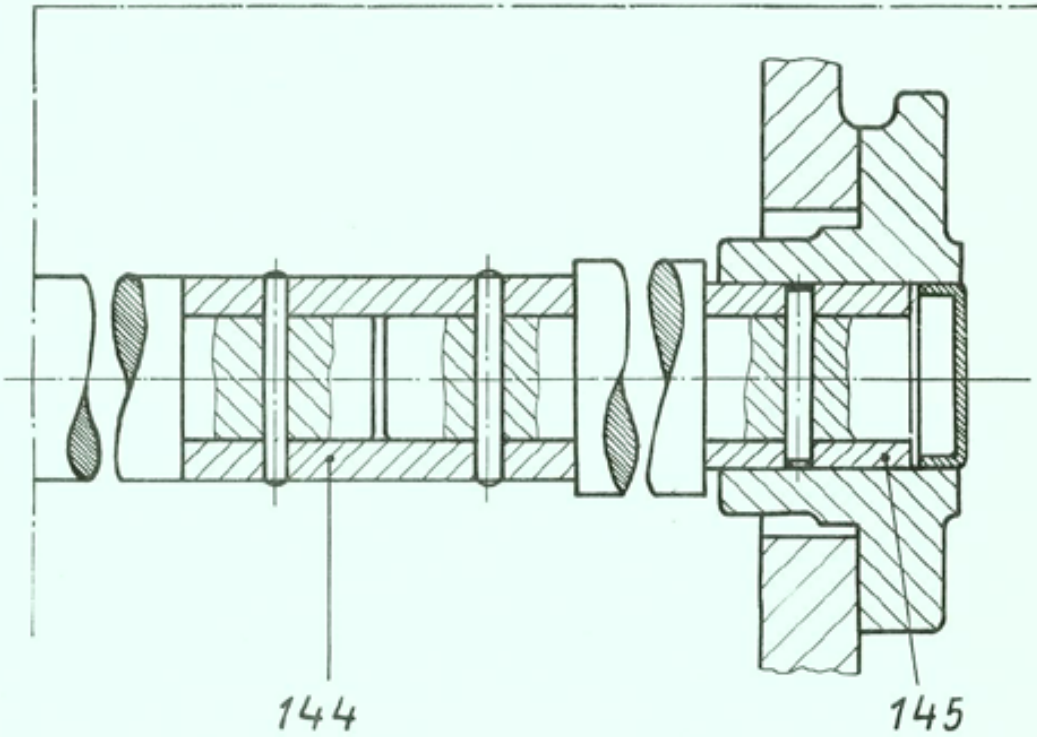

G. Boley, Eßlingen a.N.

Ersatz für
Ersetzt durch

Gez. 8.5.52 gepr. AV bearb. gen.

Boley

Transport Instructions
for BOLEY Sliding, Surfacing and
Screwcutting Lathe Model 5LZ

BON 715-6 e

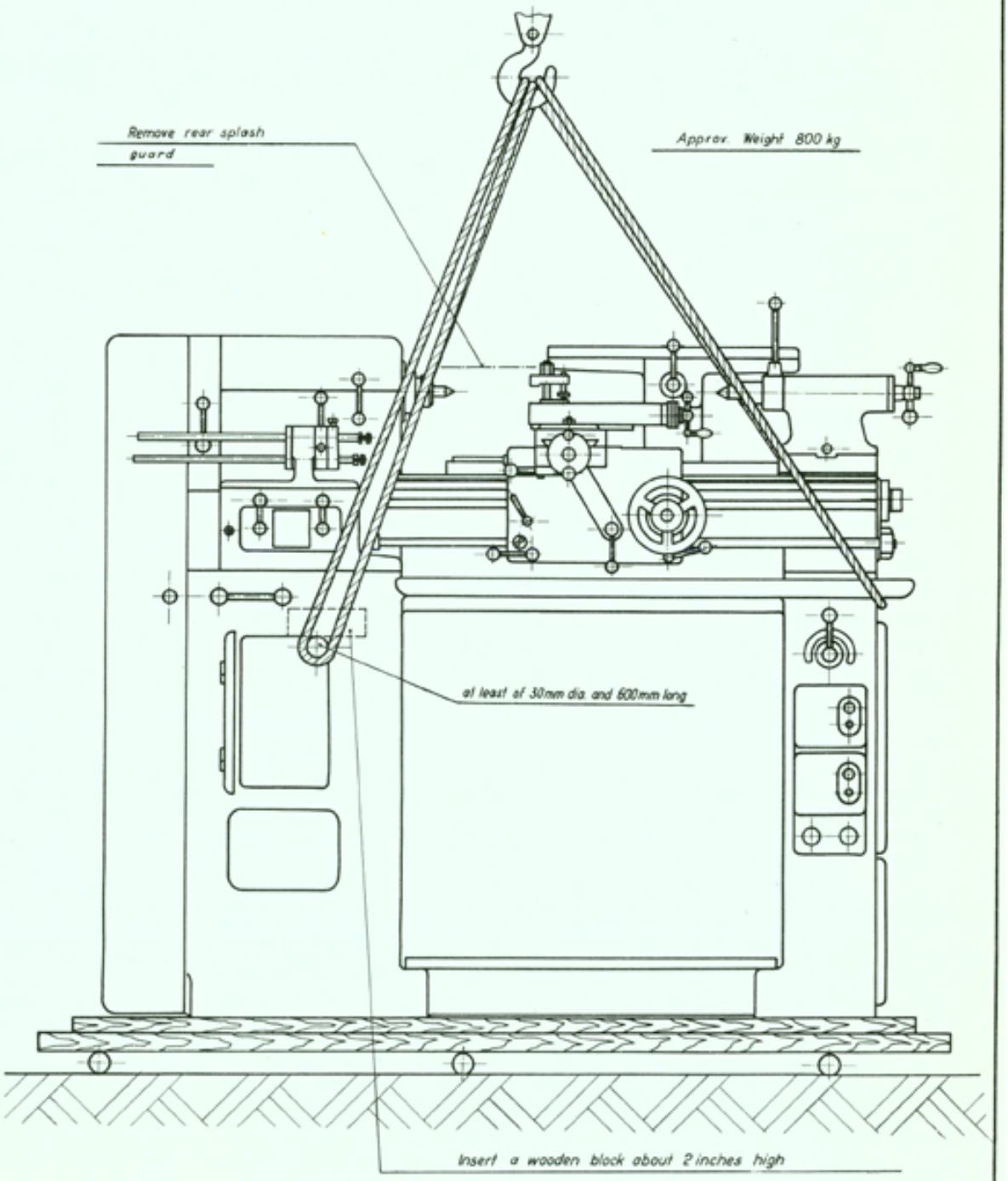

G. Boley Werkzeug- und Maschinenfabrik Eßlingen / Neckar

Abgelegt in Mappe

Boley

geändert zu 5 LZ

Register of change gears

Stückl. S 4 01

BON 377/93a e

G.BOLEY Werkzeug- u. Maschinenfabrik Eßlingen/Neckar

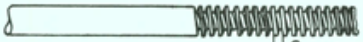

$$\frac{a \cdot c \cdot e}{b \cdot d \cdot f} = \frac{mm}{4}$$

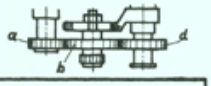

mm					Zoll-INCH-Pouce					Modul						
	a	b	c	d		a	b	c	d		a	b	c	d	e	f
0.2	30	120	25	125	80	30	90	25	105	0.3	26	120	87	80		
0,25	30	100	25	120	72	30	85	30	120	0,4	26	120	87	60		
0,3	25	120	45	125	64	25	85	27	80	0,5	50	80	87	40	26	90
0,35	25	80	35	125	60	25	85	45	125	0,6	65	120	87	100		
0,4	25	60	30	125	56	25	70	27	85	0,7	26	60	87	30	35	80
0,45	30	80	30	100	48	25	85	45	100	0,8	26	90	87	40		
0,5	25	60	30	100	44	25	65	45	120	0,9	26	80	87	40		
0,6	30	60	30	100	42	45	85	30	105	1	26	60	87	30	50	80
0,7	35	60	30	100	40	40	70	25	90	1,2	26	40	60	80	87	45
0,75	25	40	30	100	36	25	85	60	100	1,25	25	40	65	80	87	45
0,8	40	60	30	100	32	50	85	27	80	1,4	35	40	87	50	65	90
1	25	120		100	30	50	85	45	125	1,5	26	40	87	80	100	60
1,25	25	120		80	28	30	85	45	70	1,6	26	45	87	30	60	80
1,5	30	120		80	26	30	65	45	85	1,75	35	30	87	60	65	80
1,75	35	120		80	24	35	70	45	85	1,8	26	40	87	80	120	60
2	40	120		80	22	30	55	45	85	2	26	40	75	60	87	45
2,5	50	120		80	20	30	120	127	100	2,1	26	30	87	80	105	60
3	60	120		80	19	30	120	127	95	2,25	45	30	65	60	87	80
3,5	35	120		40	18	30	120	127	90	2,4	26	30	87	45	90	80
4	30	120		30	17	30	120	127	85	2,5	50	30	65	60	87	80
4,5	45	120		40	16	25	100	127	80	2,7	26	30	90	40	87	80
5	50	120		40	15	25	125	127	60	2,75	55	30	65	60	87	80
5,5	55	120		40	14	30	120	127	70	3	30	30	65	60	87	40
6	60	120		40	13	30	120	127	65	3,25	27	45	90	25	65	55
7	70	120		40	12	25	80	127	75	3,5	35	30	65	60	87	40
8	40	30	90	60	11	25	110	127	50	3,75	50	30	65	80	87	40
9	45	30	90	60	10	45	120	127	75	4	50	30	65	75	87	40
10	50	30	90	60	9	35	70	127	90	4,5	45	30	65	60	87	40
12	60	30	75	50	8	35	80	127	70	5	50	30	65	60	87	40
14	70	30	75	50	7	40	80	127	70	5,25	65	30	70	80	87	40
16	40	30	90	30	6	35	70	127	60	5,5	65	30	55	80	87	30
18	45	30	90	30	5	35	70	127	50	6	65	40	90	60	87	45
20	50	30	90	30	4½	35	70	127	45	6,75	65	40	87	80	90	30
22	55	30	90	30	4	30	80	127	30	7	70	40	87	30	65	60
24	60	30	90	30						7,5	65	30	75	60	87	40
										8	65	30	80	60	87	40

25-26-27-30-30-35-40-45-50-55-60-65-70-75-80-85
87-90-95-100-105- 110-120-125-127

BON 377/93a

290

2

190

3

Werkstoff Al.-Blech	Breite u. Dicke 190 1	Ersetzt für / Ersetzt durch	Ø
		Länge 290	Modell Nr.
			Maßstab 1:1
			Pausen für Abl.

Änderungen hinzu 15.2.65

G. Boley, Eßlingen a.N.

Gez. 11.6.53 gepr. AV bearb. gen.

Boley

Cutting speeds in metres per min. on 5 LZ Lathe

BON 703/7 e

Spindle speeds	Component dia.												
n	5	10	15	20	25	30	40	50	60	70	80	90	100
28	0,44	0,88	1,32	1,76	2,2	2,64	3,52	4,4	5,28	6,16	7,04	7,92	8,8
35,5	0,56	1,12	1,68	2,24	2,8	3,36	4,48	5,6	6,72	7,84	8,96	10	11,2
45	0,7	1,4	2,1	2,8	3,5	4,2	5,6	7	8,4	9,8	11,2	12,6	14
56	0,88	1,76	2,64	3,52	4,4	5,28	7,04	8,8	10,5	12,3	14	15,8	17,6
71	1,1	2,2	3,3	4,4	5,5	6,6	8,8	11	13,2	15,4	17,6	19,8	22
90	1,4	2,8	4,2	5,6	7	8,4	11,2	14	16,8	19,6	22,4	25,2	28
112	1,8	3,6	5,4	7,2	9	10,8	14,4	18	21,6	25,2	28,8	32,4	36
140	2,2	4,4	6,6	8,8	11	13,2	17,6	22	26,4	30,8	35,2	39,6	44
180	2,8	5,6	8,4	11,2	14	16,8	22,4	28	33,6	39,2	44,8	50,4	56
224	3,5	7	10,5	14	17,5	21	28	35	42	49	56	63	70
280	4,4	8,8	13,2	17,6	22	26,4	35,2	44	52,8	61,6	70,4	79,2	88
355	5,6	11,2	16,8	22,4	28	33,6	44,8	56	67,2	78,4	89,6	100	112
450	7	14	21	28	35	42	56	70	84	98	112	126	140
560	8,8	17,6	26,4	35,2	44	52,8	70,4	88	105	123	140	160	176
710	11,2	22,4	33,6	44,8	56	67,2	89,6	112	134	156	180	201	224
900	14,2	28,4	42,6	56,8	71	85,2	113	142	170	200	230	255	284
1120	17,6	35,2	52,8	70,4	88	105	140	176	211	246	281	316	352
1400	22	44	66	88	110	132	176	220	264	308	352	396	440
1800	28	56	84	112	140	168	224	280	336	392	448	504	560
2240	35	70	105	140	175	210	280	350	420	490	560	630	700
2800	44	88	132	176	220	264	352	440	528	616	704	792	880
3550	56	112	168	224	280	336	448	560	672	784	896	1008	1120

G. Boley, Eßlingen a. N. | Ersatz für | Ersetzt durch | Gez. 26.10.51

Packing list for BOLEY Sliding, Surfacing and Screwcutting Lathe Model 5 LZ

Standard equipment (included in machine price):

1 driver plate a 48 mA
1 centre adaptor a 24
1 centre a 25
1 protective cover on headstock
1 tungsten carbide centre, MT 3, for tailstock, b 29,4
10 shear pins in the glass container, aZt 1/54a
1 set change gears S 4 C 3, comrpising 25 pieces
1 grease gun BON 417/1
2 tins = 2 litres lubrication oil "Mobil Velocite Oil No. 4" for headstock
2 operating instructions

Tool kit:

1 "C" spanner for the carriage, 25/28
2 "C" spanners for the carriage, 30/32
2 "C" spanners for the leadscrew, 45/50
1 "C" spanner for the headstock, 58/62
1 "C" spanner for the headstock, 80/90
1 "C" spanner for the headstock, 95/100
1 adjustable peg spanner BON 702/1
1 adjustable peg spanner BON 702/5
1 spanner SW 9
1 spanner SW 10, for turret stop
1 spanner SW 12, for turret stop
1 spanner SW 11, for carriage stops, carriage and gear carrier
1 spanner SW 14, for oil plug and clamping lever
1 spanner SW 17, for tailstock, gear carrier and return traverse gear
1 spanner SW 19, for drive, shear pins and toolholder
1 spanner SW 22, for return gear
1 hexagon wrench SkSti 4 for top slide
1 hexagon wrench SkSti 5
1 hexagon wrench SkSti 6
1 hexagon wrench SkSti 8 for back gear
1 hexagon wrench SkSti 10 for tailstock
1 square spanner VkAst, 8 x 125, for carriage
1 spanner SkRo 19 x 160 for bar
1 key bow Sg 13 x 160
1 key bow Sg 8 x 100 for driver
1 square spanner aVkst 1/5 } for b 7,3
1 odd spanner 1/4 }
3 wrenches aVks 1/2 } for d 34
3 wrenches Vks 1/3 }
6 hexagon nuts M7 DIN 934