OPERATING INSTRUCTIONS

ZF-Electromagnetic Clutches for Wet Operating Conditions

12/I

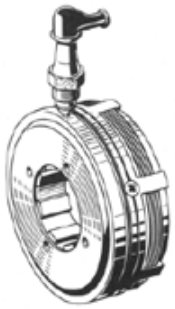

Multiple-disc Type Clutches with slip-rings

Multiple-disc Stationary Field Type Clutches

Toothed Type Clutches with slip-rings

Stationary Field Toothed Type Clutches

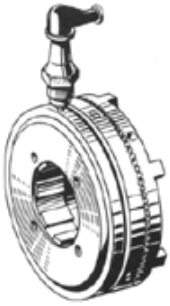

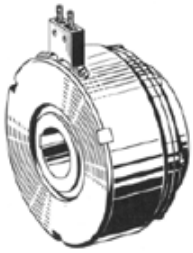

Construction
Installation and Commissioning
Lubrication
Current Supply Brushes
Electrical Connection
Repairs
Ordering of Spares
Distribution, Siemens-Schuckertwerke AG

F 42178 / R 2835-666

ZAHNRADFABRIK FRIEDRICHSHAFEN AG

1. Construction

1.1 Multiple-disc type clutches with slip-rings

Types EK, EK...B, EK...H

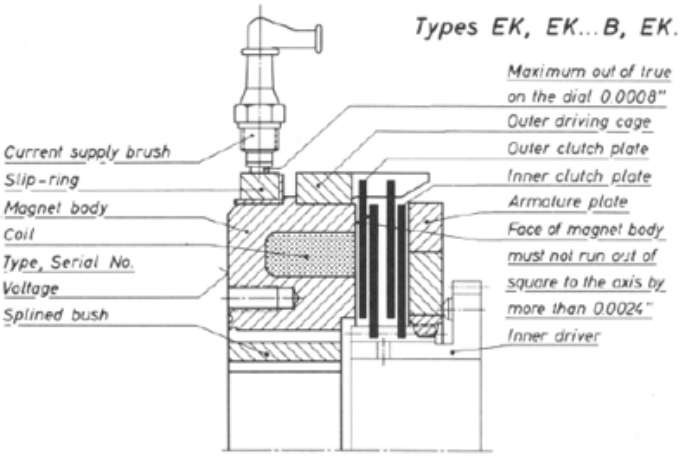

Fig. 1

Type EK
with splined bush

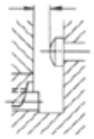

Fig. 2

Armature play to be measured when clutch is energized

Clutch type EK, also design "B" and "H"	Voltage (V)	Power 1) consumption (W) P_{20}	P_{120}	Clutch Plates Number of pairs	Armature play (mm)
0.25	24	3.5	2.5	2	0.7
0.5	24	8	6	2	0.7
1	24	18	13	3	1.0
2	24	13	9.5	4	1.8
2 d	24	17	13	4	1.2
5	24	26	19	5	2.6
5 d	24	28	20	5	1.8
10	24	23	17	5	2.6
10 d	24	36	26	5	2.0
10 e	24	34	25	5	2.0
20	24	43	31	5	2.5
20 d	24	51	37	5	2.5
20 e	24	46	33	6	3.0
40	24	79	57	6	4.0
40 d	24	83	60	6	3.5
40 e	24	68	49	8	4.5
60 d	24	91	66	6	4.0
80	24	89	64	6	5.0
120 e	24	140	100	8	4.0
160	24	155	110	7	4.5
320	24	200	140	7	5.5
630	24	310	220	on request	
1000	24	330	230		

1) At a coil temperature of 20°C or 120°C

Type EK...C

Fig. 3

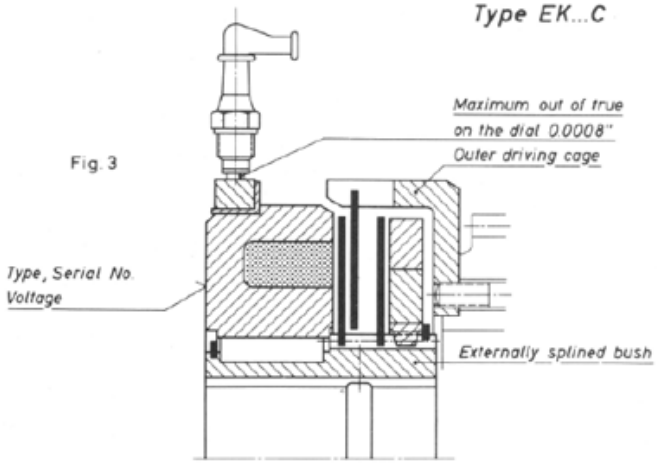

The armature play of design "C" clutches is pre-set at the works at the assembly stage.

Clutch type	Voltage (V)	Power 1) consumption (W) P_{20}	P_{120}	Number of clutch plates inner	outer	Armature play (mm)
EK 1 C	24	18	13	3	3	1.0
EK 2dC	24	17	13	4	4	1.2
EK 5dC	24	28	20	6	5	1.8
EK 10dC	24	36	26	6	5	2.0
EK 20dC	24	51	37	6	5	2.5
EK 40dC	24	83	60	7	6	3.5
EK 60dC	24	91	66	7	6	4.0
EK 80 C	24	89	64	7	6	5.0
EK 120eC	24	140	100	8	7	4.0

1) At a coil temperature of 20°C or 120°C

1.2 Multi-disc stationary field type clutches

Types up to EKR 20

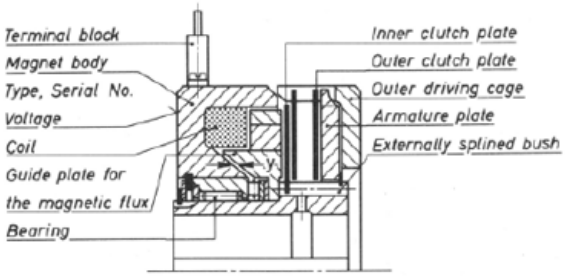

Fig. 4

Clutch type	Voltage (V)	Power 1) consumption (W) P_{20}	P_{120}	Number of clutch plates	Armature 2) play (mm)	y
EKR 1	24	34	25	3 pairs	1	0.3 ± 0.05
EKR 2	24	40	29	4 pairs	1.2	
EKR 5 *	24	44	32	5 inner 4 outer	1.5	
EKR 10	24	70	50	5 pairs	2.0	
EKR 20	24	86	62	5 pairs	2.5	

* Type EKR 5 has an armature plate with an internally splined bronze bush.

1) At a coil temperature of 20°C or 120°C

2) Minimum dimensions

Types EKR 30 to EKR 250 and EKR 30G to EKR 250G

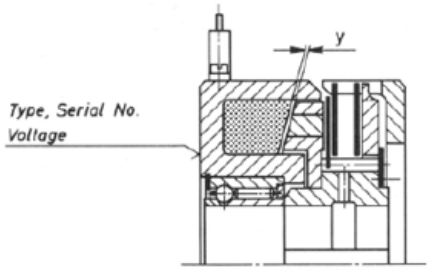

Fig. 5 Type EKR

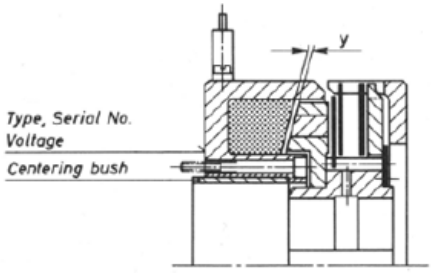

Fig. 6 Type EKR.....G

Clutch type	Voltage (V)	Power 1) consumption (W) P_{20}	P_{120}	Number of clutch plates	Armature 2) play (mm)	y
EKR 30 EKR 30G	24	100	72	7 pairs	4	1 ± 0.3
EKR 40 EKR 40G	24	89	64	6 pairs	3.5	1 ± 0.3
EKR 60 EKR 60G	24	102	74	6 pairs	4	1 ± 0.3
EKR 80 EKR 80G	24	130	96	7 pairs	2.5	1.5 ± 0.3
EKR 120 EKR 120G	24	150	110	8 pairs	4.5	1 ± 0.3
EKR 160 EKR 160G	24	207	149	6 outer 7 inner	4	1.5 ± 0.3
EKR 250 EKR 250G	24	226	163	7 outer 8 inner	4.5	1.5 ± 0.3

1) At a coil temperature of 20°C or 120°C

2) Minimum dimensions

1.3 Toothed type clutches with slip-rings

Types EK...Z and EK...BZ

(also suitable for dry operating conditions)

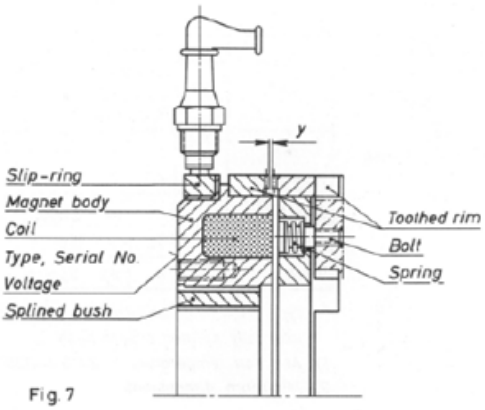

Fig. 7

Type EK...Z
with splined bush

y: up to EK 1BZ $0.3^{+0.2}$, from EK 2dZ upwards $0.4^{+0.3}$

Clutch type	Voltage (V)	Power 1) consumption (W) P_{20}	P_{120}
EK 0.25Z	24	7.5	5.5
EK 0.5 Z	24	12	8.5
EK 1 Z EK 1 BZ	24	13	9.5
EK 2 dZ EK 2dBZ	24	28	30
EK 5dZ EK 5dBZ	24	48	35
EK 10dZ	24	57	41
EK 10 eZ EK 10eBZ	24	58	42
EK 20dZ EK 20dBZ	24	68	49
EK 20eZ EK 20eBZ	24	59	42
EK 40dZ EK 40dBZ	24	83	60
EK 40 eZ EK 40eBZ	24	68	49
EK 60 dZ EK 60dBZ	24	91	66
EK 80 Z EK 80 BZ	24	100	70
EK 120eZ EK 120eBZ	24	122	88
EK 160 Z EK 160 BZ	on request		

1) At a coil temperature of 20°C or 120°C

1.4 Stationary field toothed type clutches

Types EKR...Z

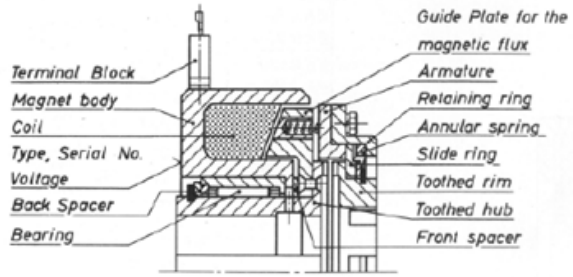

Fig. 8

Type EKR...Z

Clutch type	Voltage (V)	Power 1) consumption (W) P_{20}	P_{120}
EKR 1Z 2)	24	36	26
EKR 2Z	24	46	33
EKR 5Z	24	62	45
EKR 10Z	24	77	56
EKR 20Z	24	98	70
EKR 40Z	24	155	110
EKR 60Z	24	165	120
EKR 80Z	24	210	150
EKR 120Z	24	220	160

1) At a coil temperature of 20°C or 120°C
2) Connecting leads only

2. Installation and commissioning

The type, serial No. and voltage are marked on the back of the magnet body. Prior to the despatch from our works the clutches are coated with a special oil to prevent corrosion and, provided that the clutches are clean, they can be fitted to the machine as received. However, should it become necessary to clean the clutches only paraffin should be used.

Gearboxes fitted with electromagnetic clutches should be cleaned carefully before assembly. The clutches attract ferrous particles which are liable to bridge the insulation. The wear of the clutch plates is insignificant and has no detrimental effect whatsoever on the clutch.

2.1 Multiple-disc clutches with slip-rings

The utmost care must be taken when fitting the magnet body to the shaft, particularly when the magnet body is to be fitted without a splined bush. Removal of the magnet body should be kept to a minimum so as not to impair the initial close fit. As the magnet body is of soft material, any formation of burrs must be avoided. For this reason all sharp edges must be radiused.

When assembled, the magnet body should not run out of square to the axis be more thant 0.0024" nor must the slip-ring run out of true by more than 0.0008". If necessary, the hardened slip-ring should be reground to a super micro finish after assembly. The surface roughness must be less than 0.127 micro inches.

The correct armature play is stated in the tables under paragraph 1.1 and applies to a horizontally mounted clutch and it can be checked when the clutch is energized (Fig. 9). With a vertically mounted clutch it is advisable to fit the armature plate at the lower end and it is recommended that the armature play be kept slightly below the specified values. In order that this can be carried out a non-magnetic spacing ring(preferably brass, on no account plastics) can be fitted between the limiting pins or ring and armature plate to give an armature play of approximately 0.008" (Fig.10).

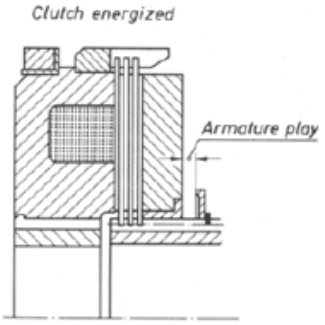

Fig. 9

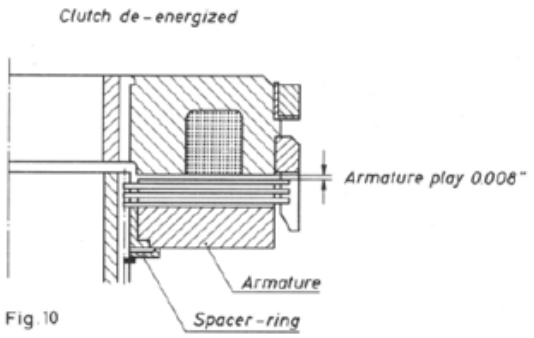

Fig. 10

The pack of clutch plates for types EK, EK...B and EK... H are assembled in the following manner: an outer clutch plate is fitted to the magnet body followed by alternate inner and outer plates. The clutch plate pack terminates at the armature plate with an inner clutch plate. Only clutches of special design, where the armature plate is externally supported, have an outer clutch plate to terminate the clutch plate pack.

On types EK...C, an inner clutch plate is fitted adjacent to the magnet body followed by alternate outer and inner clutch plates. On types EK 1 C and EK 2 dC the clutch plate pack terminates with an outer clutch plate, whereas all other clutches from EK 5 dC upward terminate with an inner clutch plate.

The number of clutch plates is stated in the table associated with Fig. 3.

Important: The assembly instructions given above for the clutch plate packs should be strictly adhered to as incorrectly assembled clutch plate packs are liable to damage the magnet body or armature plate through rubbing.

The armature plates have a bronze bush with collar. When fitting the armature plate ensure that the collar faces outwards and not inwards towards the clutch plates.

2.2 Multi-Disc Stationary field type clutches

During fitting or dismantling, excess pressure or blows should be avoided to the bearings which are fitted in the clutch body. Therefore adequate tolerances should be kept and fitting/withdrawing tools should only be confined to the splined bush or the inner race of the bearing.

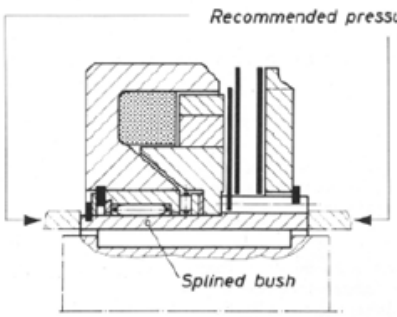

Fig.11

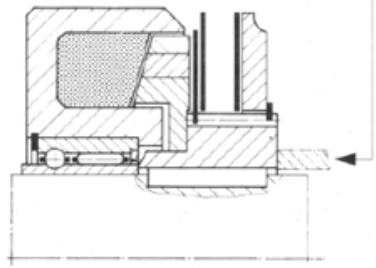

Fig.12

Where possible, it is recommended that the clutch be assembled to the shaft in the following manner: Firstly the splined bush together with the guide plate for the magnetic flux, should be fitted to the shaft, followed by the magnet body which contains the bearings. When this method of fitting is not possible, the clutch can be fitted to the shaft as a complete unit, but ensuring that the fitting tools are applied only to the recommended pressure points as outlined above. When withdrawing the bearings for dismantling purposes the recommended pressure points should also be used.

The outer driving cage(Fig.4) should be fitted to the appropriate counter part and secured.The driving cage is supplied with a rough bored pilot hole.

The correct anchoring of the magnet body prevents turning of same and does not apply any axial or radial loads. If incorrectly fitted axial or radial loads are applied to the bearings, this is detrimental to the satisfactory operation of clutch.

The clutch plate pack is assembled in the following manner: At all times the inner plate is next to the magnetic guide ring followed by an outer plate. The remainder of the pack is fitted alternatively with inner and outer plates and finishes up with an outer or inner plate according to the number of plates specified in the tables 1.2 and is completed by the armature plate.

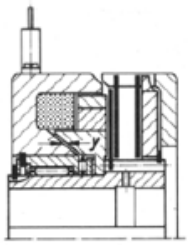

Fig.13 *Types up to EKR 20*

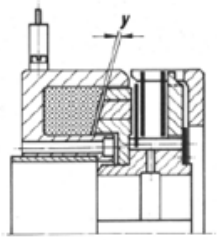

Fig.14 *Type EKR.....G*

In order to obtain a good conductivity of the magnetic flux from the stationary magnet body to the rotating guide ring a conical shaped air gap "Y" is used on clutches up to EKR 20 inclusive (Fig. 13).

Since this air gap is the governing factor for the satisfactory working of the clutch, shims are used to compensate for any manufacturing tolerances. In the event of clutches being dismantled all shims should be re-fitted to the clutch from which they have been taken.

The specified clearance "Y" (see table 1.2) between the stationary magnet body and the rotating guide ring must also be maintained for clutches type EKR...G (Fig.14)

In order to be able to check that the air gap "y" is correctly set at the final assembly stage, we recommend that prior to the final assembly the clutch body and magnetic guide ring should be assembled with shims inserted between. The thickness of these shims should be equal to air gap "y" as stated in the tables. The front face of the magnet body should be marked on the circumference of the guide ring with a scriber. After removing the shims the final assembly can then take place, ensuring that the line scribed on the guide ring lines up with the front face of the magnet body.

The correct armature play is stated in the tables under paragraph 2 and applies to a horizontally mounted clutch and it can be checked when the clutch is energized(Fig.15). With a vertically mounted clutch it is advisable to fit the armature plate at the lower end and it is recommended that the armature play be kept slightly below the specified values. In order that this can be carried out a non-magnetic spacing ring (preferably brass, on no account plastics) can be fitted between the limiting pins or ring and armature plate to give an armature play of approximately 0.008", when clutch is de-energized (Fig. 16).

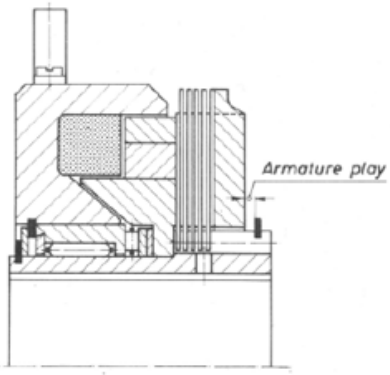

Fig.15

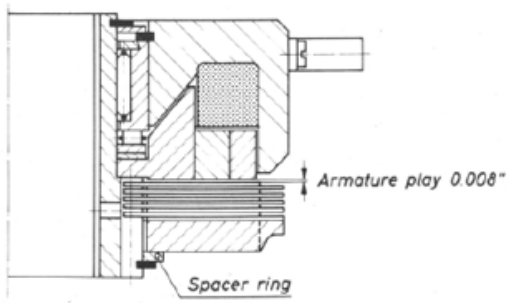

Fig.16

2.3 Toothed type clutches with slip-rings

The toothed type clutches with slip-rings are similar in their design to the multiple-disc type clutches with slip-rings. On the toothed type clutches the torque is transmitted via the two toothed rings instead of the clutch plates. One toothed ring is fitted to the magnet body whereas the other one forms a part of the armature plate. The magnet body for both types of clutches are in principal identical and for fitting and dismantling paragraph 2.1 should be referred to.

Special attention to the tooth clearance which is a governing factor to the satisfactory operation of the clutch. The values which are given in the tables under paragraph 1.3 should be strictly adhered to. Furthermore it is important that the six outer drivers on the armature plate engage and move easily in their conterpart without jamming.

The clutches should only be engaged whilst at standstill or at synchronous speed. However, they can be disengaged, whilst under load. These clutches can also be used for dry operating conditions and brushes for dry operation must be used. These brushes have identical dimensions but have a carbon insert in place of the bronze insert for wet operation, for futher particulars refer to paragraph 4 "Current supply brushes". When the clutches to be operated under dry conditions, the slip-ring should be cleaned with paraffin before installation in order to remove the protective oil film. Even the slightest traces of oil or grease should be kept from the slip-ring and the brush.

2.4 Stationary field toothed type clutches

The bearing arrangement for the magnet body of these clutches is similar to that of the multi-disc stationary field type clutches. Therefore the particulars given under paragraph 2.2 regarding installation also apply. The tooth clearance for the disengaged clutch is pre-set at the works in the assembly stage. The front and back spacers as shown in Fig. 8 under paragraph 1.4 should not be interchanged and care should be taken when re-assembling a clutch after dismantling that these are replaced in their original positions. Due to the bearings this clutch is primarily suitable for working under wet operating conditions.
The outer drivers should be able to slide into their counter parts without backlash or jamming.
The clutches should only be engaged whilst at standstill or at synchronous speed, however, they can be disengaged under load.

3. Lubrication

3.1 Oil supply

Satisfactory working of the clutch is also governed by the correct lubrication arrangement. Clutches which are not subjected to an excessive thermal load or the smaller size of clutch can be lubricated by a drip feed or by the oil mist prevailing in the gear box. This does not apply to the toothed clutches with slip-rings described under paragraph 2.3 which can also be operated dry if current supply brushes for dry operation are used. The clutches,particularly the slip-rings, should not be immersed in oil.

3.2 Type of oil

Only well refined solvent mineral oil, having a high resistance to ageing should be used. It must remain neutral with respect to copper and steel, even in the presence of small quantities of condensation water and at high temperatures. In order to obviate oxydation or coating, which would be conductive, the oil should have no electrolytic properties, thus eliminating the unsatisfactory working of the clutches. If in doubt, the oil suppliers should be consulted. Preference should be given to oils with a viscosity of 89 Redwood seconds at 50°C.

In most of the applications where ZF electromagnetic clutches are used, they are fitted into gearboxes which contain other machine parts, so that a common lubricant is necessary. These parts are mostly gear wheels and roller bearings, which govern the type of oil to be used. It is recommended therefore that the selected oil should contain anti-ageing and foam inhibiting additives.

3.3 Oil change

No particulars can be given with regard to the interval between oil changes since this depends mainly on the operating conditions imposed on the clutch, the oil quantity available, oil temperature, etc. However, it is advisable that regular oil changes should be carried out. If in doubt, the oil should be tested by the suppliers for its lubricating properties.

Due to the wear on the clutch plates, the oil may become discoloured. This discolouration is quite harmless and has no detrimental effect on the clutches or machine parts fitted in the gear-box.

The oil level recommended by the machine manufacturers must be adhered to in order to ensure adequate lubrication and cooling of the electromagnetic clutches.

4. Current supply brushes

In order to ensure satisfactory operation of clutches only the specified brushes should be used.

Under wet operating conditions, peripheral slip-ring speeds of up to 60 ft/secs, when clutch is energized, are permissible. A dummy brush must be used for speed exceeding 30 ft/secs. or when the clutch is constantly energized below this speed.

With the exception of a sealed insulating cap the design of the dummy brush is identical to the telescopic current supply brush. The dummy brush may be fitted at any point of circumference of the clutch.

Dummy brushes are not connected to the electrical supply.

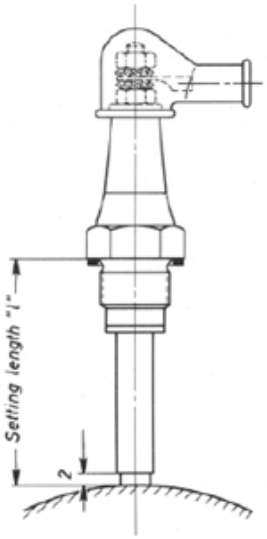

Fig. 17

Current supply brushes for wet operating conditions

Current supply brushes Fig.17	Dummy brushes Fig.18	To be used for clutch types	Colour code	"l" mm
Sk 4	BK 4	EK 0.25 EK 0.5	green	14
TSK 6/16 TSN 6/16 TSL 6/16	TBK 6/16 TBN 6/16 TBL 6/16	EK 1 to EK 5d	yellow	14 22 from 30 to 100
TSN8 TSL8	TBN8 TBL8	EK 10 and larger	red	22 from 30 to 100

Dummy brush

Fig. 18

When clutches are operated under dry conditions, the following current supply brushes must be used:

Current supply brushes for dry operating conditions

Current supply brushes Fig.20	Under dry operating conditions dummy brushes are not required	To be used for clutch type	
STK 4		EK 0.25 EK 0.5	No colour code
STK 6/16 STN 6/16 STL 6/16		EK 1 to EK 5 d	
STN 8 STL 8		EK 10 and larger	

4.1 Maintenance

The current supply brushes are subject to wear to the limits as shown in Fig. 19. It is recommended that the brushes should be checked for wear at regular intervals of three months.

Aged oil causes the brushes to become fouled by gummed oil which lodges in the crevices, thereby causing the brush to loose its freedom of movement. These brushes must be cleaned by washing out the resinous deposits. It is therefore recommended that the oil be changed regularly.

The oil specified for clutches, i.e. viscosity of 89 Redwood seconds at 50°C, is recommended for the optimum working conditions of brushes. Oil having a higher viscosity impairs the reliability of operation.

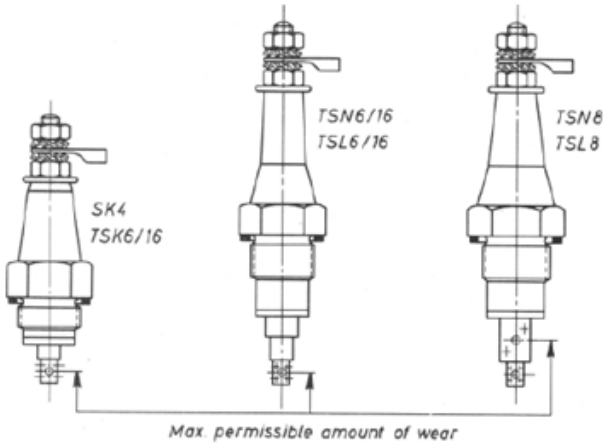

Fig. 19

With regard to the current supply brushes for dry operating conditions (Fig.20) the markings on the carbon brushes are similar to those on the brushes for wet operating conditions (Fig. 19). As soon as the marks have worn away the brush inserts must be replaced.

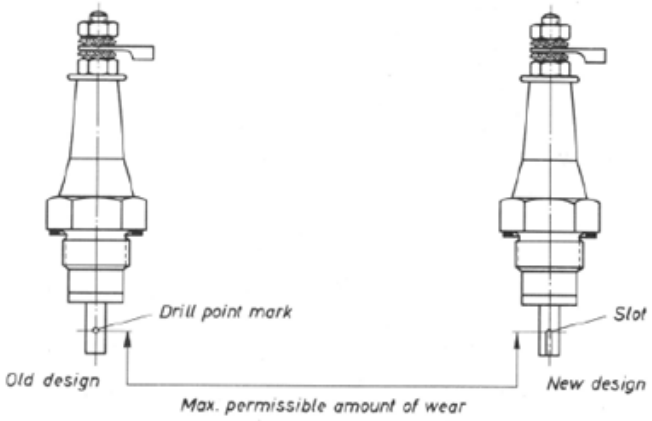

Fig. 20

4.2 Replacing worn brush inserts

The brush inserts "a" Fig. 21 are also obtainable without the stem "b". Brushes for wet operation have a colour code around the stem to avoid inserting the wrong type of brush inserts, therefore the colour code of the insert and stem should be matched before replacement.

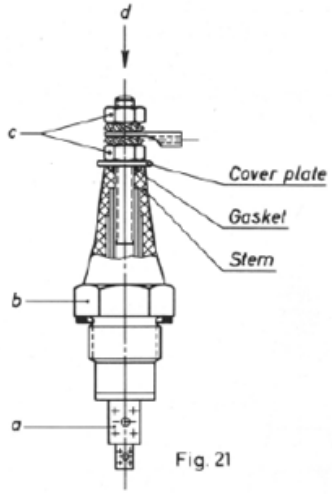

Fig. 21

After unscrewing the lock nuts "c" the brush insert can then be removed by slight tapping in direction of "d" and the replacement insert can then be fitted.

A gasket is now fitted to the latest design of brushes for wet operation.

This gasket supercedes the sealing compound used in earlier design.

The replacement of inserts for current supply brushes operating under dry conditions are carried out in the same manner, except that no gasket it used.

4.3 Lubrication for wet operating conditions.

The oil spray or oil mist prevailing in gear-boxes is fully adequate for the lubrication of the current supply brushes. The slip-ring should not be immersed in oil.

Any build up of oil in front of the brush, due to excessive lubrication, can only lead to extensive pitting of the slip-ring, premature wear and eventual breakdown.

In order to obtain a longer life time of brush, it should be mounted rigidly to avoid any effect from vibrations. If brackets are used for mounting when not screwed direct into machine housing, the bracket should be bolted down at both ends to ensure rigidity.

Current supply brushes must be connected to the positive pole of supply. If connected to the negative pole, the life of slip-ring and brush is considerably shortened.

The specified setting lenth "l" must be adhered to; a tolerance of + 1 mm is permissible. If this dimension is exceeded, the thrust pressure of the brush would be too low, thus causing arcing and pitting of the slip-ring. For further details regarding fitting refer to Fig. 22

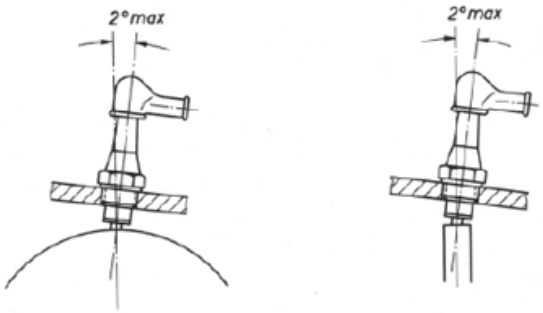

Maximum permissible deviations

Fig. 22

5. Electrical Connection

5.1 The operating voltage is marked on the back of the magnet body.

The operating voltage for standard clutches is 24 V with a tolerance of $^{+5\ \%}_{-10\ \%}$ (measured on the slip ring or on the terminal).

5.2 Type of current: D.C.

5.3 Important:

The current should never be interrupted by lifting the current supply brush from the slip-ring. This can only cause pitting of the slip-ring and may lead to premature wear and possible breakdowns.

The positive pole of supply must always be connected to the slip-ring and the negative pole earthed. Thus the life of the brushes is extended considerably.

The surge quenching units should be fitted in compliance with our instructions; otherwise excessive surge voltages may result which would destroy the coil insulation. For further particulars refer to the Publication No. 10, "Electrical Accessories for Electromagnetic Clutches".

5.4 No current should be allowed to flow through the anchoring arrangement of the stationary field type clutches. The supply to these clutches must be connected to the terminals on the clutch.

6. Repairs

When carrying out repairs, special attention should be paid to paragraph 2 (Installation and Commissioning). If in the course of time the slip-ring becomes pitted or rough it can then be re-ground to a depth not exceeding 0.040" of the diameter. The depth of hardness is sufficient to allow for this to be carried out. The surface roughness must be less than 0.12 micro-inches. If re-grinding is no longer possible, new slip-rings can be fitted by ZF.

When replacing clutch plates, it is important that they are fitted in their correct sequence (see paragraph 2.1). The armature must also be fitted correctly, i.e. the collar on the bronze brush must face outwards and not inwards towards the clutch plates.

For details regarding the replacement of brush inserts refer to paragraph 4.2

7. Ordering spares

When re-ordering spare clutches or clutch plates the order should list the clutch type, serial no. and voltage as marked on the back of the magnet body together with the name of the manufacturer of the machine where the clutches are fitted. With regard to the current supply brushes the correct type must be designated. If in doubt please supply details of size of thread on the steel body, length of installation, fitted to clutch type EK.... and whether for wet or dry operating conditions.

Distribution

Distribution and technical advice regarding ZF electromagnetic clutches as supplied to the engineering industry is undertaken by Siemens-Schuckertwerke AG., Erlangen, Germany, also their branch offices, sales companies and their representatives. Furthermore, the design offices of ZF are at all times at your disposal for designing proposals to suit your application. It is therefore recommended that new applications of drives incorporating electromagnetic clutches be submitted to ZF for approval, stating types of clutches to be used together with all relevant technical data of application.